LOTS 10 & 11 SOUTHWOOD ACRES S/D
401-669, 551-615, 753-1649, 792-

MONTENEGRO RANCH LLC
225 EAST DANIA BEACH BLVD
DANIA BEACH, FL 33004

2026

36-4S-16-03382-011

COLUMBIA COUNTY PROPERTY

BUILDING CHARACTERISTICS

ELEMENT	CD	CONSTRUCTION
Exterior Wall	19	COMMON BRK 100
Roof Structur	03	GABLE/HIP 100
Roof Cover	03	COMP SHNGL 100
Interior Wall	05	DRYWALL 100
Interior Floo	14	CARPET 60
Interior Floo	15	HARDTILE 40
Air Condition	03	CENTRAL 100
Heating Type	04	AIR DUCTED 100
Bedrooms		4 100
Bathrooms		3 100
Frame	02	WOOD FRAME 100
Stories	1.5	1.5 100
Architectual	05	CONV 100
Units		0 100
Quality	06	06

DOR CODE 0101 SFRES/SFRES
MAP NUM | MKT AREA 01
NEIGHBORHOOD/LOC 36416.010 1.00/

AREA TYPE	TOTAL GROSS AREA	PCT OF BASE	YEAR	TOT ADJ AREA	SUBAREA MARKET VALUE
BAS	6,550	100		6,550	437,606
FCP	1,066	25		266	17,772
FOP	60	30		18	1,203
FOP	300	30		90	6,013
FOP	540	30		162	10,823
FUS	168	100		168	11,224
TOTALS	8,684			7,254	484,640

MARKET ADJUSTMENTS

TYPE	MDL	EFF. AREA	TOT ADJ PTS	EFF. BASE RATE	REPL. COST NEW	AYB	EYB	ECON	FNCT		NORM	% COND
0100	01	7,254	117.2090	133.62	969,279	1975	1985	15	0	0	35.00	50.00

1 SINGLE FAM 0% - 2024 Heated Area: 6718 HX Base Yr

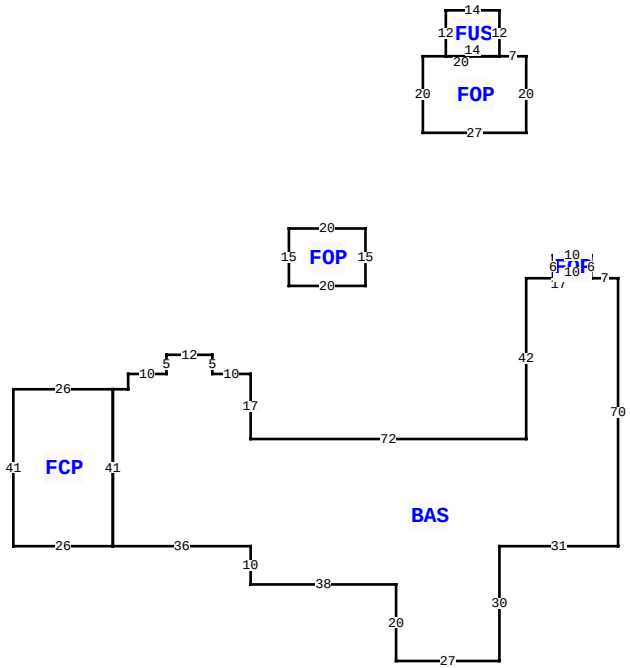

976 SW HAMLET CIR, LAKE CITY

BLD DATE		LGL DATE	
XF DATE		LAND DATE	04/21/2026 MLU
INC DATE		AG DATE	

VALUATION SUMMARY

VALUATION BY	STANDARD
Tax Group: 3	Tax Dist:
BUILDING MARKET VALUE	749,876
TOTAL MARKET OB/XF VALUE	50,660
TOTAL LAND VALUE - MARKET	31,840
TOTAL MARKET VALUE	832,376
SOH/AGL Deduction	0
ASSESSED VALUE	832,376
TOTAL EXEMPTION VALUE	0
BASE TAXABLE VALUE	832,376
TOTAL JUST VALUE	832,376
NCON VALUE	0
INCOME VALUE	
PREVIOUS YEAR MKT VALUE	856,298

BLDG:5:1: OLD MH WITH ADDITIONS

PERMIT NUM	DESCRIPTION	AMT	ISSUED
000054189	Roof Replacement	21,165	10/03/2025

SALES DATA

OFF RECORD Number	DATE	TYPE INST	Q U	V I	RSN CD	SALE PRICE
1505/1223	12/15/2023	WD	Q	I	05	2,400,000
GRANTOR: DIAZ RANCH LLC						
GRANTEE: MONTENEGRO RANCH LL						
1231/1356	1/11/2012	WD	U	I	17	200,000
GRANTOR: MOUNTAINTOP MINISTRIE						
GRANTEE: DIAZ RANCH LLC						

BUILDING NOTES

BUILDING DIMENSIONS

BAS=[ORIG=0,0] W72 N17 W10 N5 W12 S5 W10 S4 W4 S41 E36 S10 E38 S20 E27 N30 E31 N70 W7 W17 S42 $
FCP=[ORIG=-108,-13] W26 S41 E26 N41 $
FOP=[ORIG=0,-80] N20 W7 W20 S20 E27 $
FOP=[ORIG=-42,-40] N15 W20 S15 E20 $
FUS=[ORIG=-7,-100] N12 W14 S12 E14 $
FOP=[ORIG=17,-42] N6 W10 S6 E10 $
.

EXTRA FEATURES

LN	OB/XF CODE	DESCRIPTION	BLD	CAP	L	W	UNITS	UT	Adj R	ADJ UNIT PRICE	ORIG COND	YEAR ON	YEAR ACTUAL	Q	% COND	OB/XF MKT VALUE	NOTES
1	0190	FPLC PF	0	0	0	0	1.00	UT	1,200.00	1,200.00	100	1993	1993	3	100	1,200	
2	0214	GRN HOUSE	0	0	22	55	1,210.00	UT	7.00	7.00	50	2000	2000	3	50	4,235	
3	0214	GRN HOUSE	0	0	18	30	540.00	UT	7.00	7.00	50	2000	2000	3	50	1,890	
4	0166	CONC,PAVMT	0	0	0	0	26,733.00	UT	4.00	4.00	30	2000	2000	3	30	32,080	
5	0262	PRCH,FOP	0	0	13	13	169.00	UT	20.00	20.00	100	2000	2000	3	100	3,380	
6	0119	MASONRY WA	0	0	1050	0	1,050.00	UT	15.00	15.00	50	2001	2001	3	50	7,875	

LAND DESCRIPTION

TOTAL OB/XF 50,660

LN	USE CODE	CLS	LAND USE DESCRIPTION	CAP	RD	LOC ZONE	FRONT	DEPTH	TOT LND UTS	UNIT TYPE	DT	DPTH FACT	% COND	TOT ADJ	UNIT PRICE	ADJ UNIT PRICE	LAND VALUE	OTHER ADJUSTMENTS AND NOTES	YEAR	DENSITY	DECL	FRZ	YR	CONSRV
1	0100	C	SFR	0		A-1	0.00	0.00	1.89	AC		1.00	1.00	1.00	16,000.00	16,000.00	30,240							
2	9600	C	WASTELAND	0		A-1	0.00	0.00	1.00	AC		1.00	1.00	0.10	16,000.00	1,600.00	1,600							

REVIEW DATE 01/28/2026 BY KS Total Acres: 2.89 Total Land Value: 31,840 Market: 0 Agricultural: 0 Common: 31,840 PRINTED 05/11/2026 BY SYS

LOTS 10 & 11 SOUTHWOOD ACRES S/D
401-669, 551-615, 753-1649, 792-

MONTENEGRO RANCH LLC
225 EAST DANIA BEACH BLVD
DANIA BEACH, FL 33004

2026

36-4S-16-03382-011

COLUMBIA COUNTY PROPERTY

BUILDING CHARACTERISTICS

ELEMENT	CD	CONSTRUCTION
Exterior Wall	08	WD OR PLY 80
Exterior Wall	19	COMMON BRK 20
Roof Structur	03	GABLE/HIP 100
Roof Cover	09	CEDAR SHAK 100
Interior Wall	05	DRYWALL 100
Interior Floo	15	HARDTILE 100
Air Condition	03	CENTRAL 100
Heating Type	04	AIR DUCTED 100
Bedrooms		3 100
Bathrooms		2 100
Frame	02	WOOD FRAME 100
Stories	1.5	1.5 100
Architectual	05	CONV 100
Units		0 100
Quality	06	06
DOR CODE	0101	SFRES/SFRES
MAP NUM		MKT AREA 01
NEIGHBORHOOD/LOC	36416.010	1.00/

AREA TYPE	TOTAL GROSS AREA	PCT OF BASE	YEAR	TOT ADJ AREA	SUBAREA MARKET VALUE
BAS	1,950	100		1,950	138,070
FHS	1,040	60		624	44,183
FOP	195	30		58	4,107
FOP	462	30		139	9,842
FST	150	55		82	5,806
FST	755	55		415	29,384
FST	870	55		478	33,845
TOTALS	5,422			3,746	265,236

MARKET ADJUSTMENTS

TYPE	MDL	EFF. AREA	TOT ADJ PTS	EFF. BASE RATE	REPL. COST NEW	AYB	EYB	ECON	FNCT		NORM	% COND
0100	01	3,746	124.2187	141.61	530,471	1990	1990	15	0	0	35.00	50.00

2 SINGLE FAM 0% - 2024 Heated Area: 2990 HX Base Yr

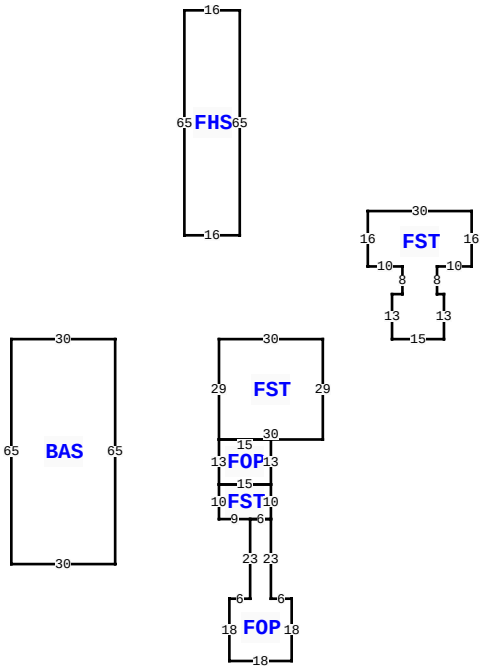

976 SW HAMLET CIR, LAKE CITY

BLD DATE		LGL DATE	
XF DATE		LAND DATE	04/21/2026 MLU
INC DATE		AG DATE	

VALUATION SUMMARY

VALUATION BY	STANDARD
Tax Group: 3	Tax Dist:
BUILDING MARKET VALUE	749,876
TOTAL MARKET OB/XF VALUE	50,660
TOTAL LAND VALUE - MARKET	31,840
TOTAL MARKET VALUE	832,376
SOH/AGL Deduction	0
ASSESSED VALUE	832,376
TOTAL EXEMPTION VALUE	0
BASE TAXABLE VALUE	832,376
TOTAL JUST VALUE	832,376
NCON VALUE	0
INCOME VALUE	
PREVIOUS YEAR MKT VALUE	856,298

PERMIT NUM	DESCRIPTION	AMT	ISSUED

SALES DATA

OFF RECORD Number	DATE	TYPE INST	Q U /	V I /	RSN CD	SALE PRICE
1505/1223	12/15/2023	WD	Q	I	05	2,400,000
GRANTOR: DIAZ RANCH LLC						
GRANTEE: MONTENEGRO RANCH LL						
1231/1356	1/11/2012	WD	U	I	17	200,000
GRANTOR: MOUNTAINTOP MINISTRIE						
GRANTEE: DIAZ RANCH LLC						

BUILDING NOTES

BUILDING DIMENSIONS

BAS=[ORIG=0,0] W30 S65 E30 N65 $
FHS=[ORIG=20,-30] E16 N65 W16 S65 $
FST=[ORIG=60,0] W30 S29 E30 N29 $
FST=[ORIG=80,0] E15 N13 W2 N8 E10 N16 W30 S16 E10 S8 W3 S13 $
FOP=[ORIG=39,52] S23 W6 S18 E18 N18 W6 N23 W6 $
FOP=[ORIG=30,29] S13 E15 N13 W15 $
FST=[ORIG=30,42] S10 E9 E6 N10 W15 $
.

EXTRA FEATURES

L N	OB/XF CODE	DESCRIPTION	BLD	CAP	L	W	UNITS	UT	Adj R	ADJ UNIT PRICE	ORIG COND	YEAR ON	YEAR ACTUAL	Q	% COND	OB/XF MKT VALUE	NOTES

LAND DESCRIPTION

TOTAL OB/XF 0

L N	USE CODE	CLS	LAND USE DESCRIPTION	CAP	R D	LOC ZONE	FRONT	DEPTH	TOT LND UTS	UNIT TYPE	D T	DPTH FACT	% COND	TOT ADJ	UNIT PRICE	ADJ UNIT PRICE	LAND VALUE	OTHER ADJUSTMENTS AND NOTES	YEAR	DENSITY	DECL	FRZ	YR	CONSRV

REVIEW DATE 01/28/2026 BY KS Total Acres: 2.89 Total Land Value: 31,840 Market: 0 Agricultural: 0 Common: 31,840 PRINTED 05/11/2026 BY SYS