LOTS 79 & 80 EMERALD COVE S/D
PHS 2

STENGEL GEORGE/STENGEL KIMBERLY M
1302 MAIN ST
INTERLACHEN, FL 32148

2026

33-3S-16-02438-179

COLUMBIA COUNTY PROPERTY

BUILDING CHARACTERISTICS

ELEMENT	CD	CONSTRUCTION
Exterior Wall	32	HARDIE BRD 90
Exterior Wall	21	STONE 10
Roof Structur	03	GABLE/HIP 100
Roof Cover	03	COMP SHNGL 100
Interior Wall	05	DRYWALL 100
Interior Floo	12	HARDWOOD 80
Interior Floo	15	HARDTILE 20
Air Condition	03	CENTRAL 100
Heating Type	04	AIR DUCTED 100
Bedrooms		3 100
Bathrooms		2 100
Frame	02	WOOD FRAME 100
Stories	2.	2. 100
Architectual	05	CONV 100
Units		0 100
Condition Adj	03	03 100
Quality	05	05
DOR CODE	0100	SINGLE FAMILY
MAP NUM		MKT AREA 06
NEIGHBORHOOD/LOC	33316.00	1.00/

AREA TYPE	TOTAL GROSS AREA	PCT OF BASE	YEAR	TOT ADJ AREA	SUBAREA MARKET VALUE
BAS	1,916	100		1,916	208,835
FGR	526	55		289	31,499
FOP	538	30		161	17,549
FUS	1,061	100		1,061	115,645
PTO	280	5		14	1,526
TOTALS	4,321			3,441	375,054

MARKET ADJUSTMENTS

TYPE	MDL	EFF. AREA	TOT ADJ PTS	EFF. BASE RATE	REPL. COST NEW	AYB	EYB	ECON	FNCT		NORM	% COND
0100	01	3,441	115.1924	131.32	451,872	2008	2008	0	0	0	17.00	83.00

1 SINGLE FAM 0% - 2026 Heated Area: 2977 HX Base Yr

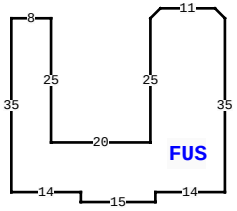

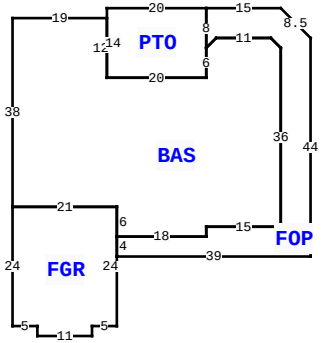

325 SW TIMBERLAND CT, LAKE CITY

BLD DATE		LGL DATE	
XF DATE		LAND DATE	04/03/2025 MLU
INC DATE		AG DATE	

COLUMBIA COUNTY PROPERTY — VALUATION SUMMARY

VALUATION BY	STANDARD
Tax Group: 3	Tax Dist:
BUILDING MARKET VALUE	375,054
TOTAL MARKET OB/XF VALUE	29,567
TOTAL LAND VALUE - MARKET	59,500
TOTAL MARKET VALUE	464,121
SOH/AGL Deduction	0
ASSESSED VALUE	464,121
TOTAL EXEMPTION VALUE	0
BASE TAXABLE VALUE	464,121
TOTAL JUST VALUE	464,121
NCON VALUE	0
INCOME VALUE	
PREVIOUS YEAR MKT VALUE	462,559

PERMIT NUM	DESCRIPTION	AMT	ISSUED
30830	POOL	215	03/07/2013
26355	SFR	866	10/24/2007

SALES DATA

OFF RECORD Number	DATE	TYPE INST	Q U	V I	RSN CD	SALE PRICE
1277/1764	7/14/2014	TD	U	V	18	4,100
GRANTOR: CLERK OF COURT (D D P						
GRANTEE: GEORGE & KIMBERLY S						
1245/2128	12/03/2012	WD	U	I	12	142
GRANTOR: TD BANK N A						
GRANTEE: GEORGE & KIMBERLY M						

BUILDING NOTES

BUILDING DIMENSIONS

BAS= W19 S38 FGR= S24 E5 S2 E11 N2 E5 N24 W21$ E21 S6 FOP= S4 E39 N44 U6 L6 W15 S8 R2 U2 E11 D2 R2 S36 W15 S2 W18$ E18 N2 E15 N36 L2 U2 W11 D2 L2 PTO= N8 W20 S14 E20 N6$ S6 W20 N12$ PTR= N30 FUS= N35 L2 U2 W11 D2 L2 S25 W20 N25 W8 S35 E14 S2E15 N2 E14$ S30$.

EXTRA FEATURES

LN	OB/XF CODE	DESCRIPTION	BLD	CAP	L	W	UNITS	UT	Adj R	ADJ UNIT PRICE	ORIG COND	YEAR ON	YEAR ACTUAL	Q	% COND	OB/XF MKT VALUE	NOTES
1	0166	CONC,PAVMT	0	0	0	0	2,196.00	UT	3.00	3.00	100	2008	2008	3	100	6,588	
2	0169	FENCE/WOOD	0	0	0	0	1.00	UT	0.00	0.00	100	2013	2013	3	100	1,200	
3	0280	POOL R/CON	0	0	15	27	405.00	UT	70.00	70.00	100	2013	2013	3	74	20,979	
4	0294	SHED WOOD/	0	0	0	0	1.00	UT	0.00	0.00	100	2013	2013	3	100	800	

LAND DESCRIPTION

TOTAL OB/XF 29,567

LN	USE CODE	CLS	LAND USE DESCRIPTION	CAP	RD	LOC ZONE	FRONT	DEPTH	TOT LND UTS	UNIT TYPE	DT	DPTH FACT	% COND	TOT ADJ	UNIT PRICE	ADJ UNIT PRICE	LAND VALUE	OTHER ADJUSTMENTS AND NOTES	YEAR	DENSITY	DECL	FRZ	YR	CONSRV
1	0100	C	SFR	0		RSF-2	0.00	0.00	1.00	LT		1.00	1.00	0.85	35,000.00	29,750.00	29,750							
2	0000	C	VAC RES	0		RSF-2	0.00	0.00	1.00	LT		1.00	1.00	0.85	35,000.00	29,750.00	29,750							

REVIEW DATE 06/14/2023 BY JB Total Acres: 1.00 Total Land Value: 59,500 Market: 0 Agricultural: 0 Common: 59,500 PRINTED 05/12/2026 BY SYS