LOT 20 MCCLINTON FARM S/D.
369-169,767-2004, 781-990, 832-1

OLIVIER KENNETH EDWARD/OLIVIER TAMATHA LUZET
544 SW BANGOR WAY
FORT WHITE, FL 32038

2026

32-6S-17-09827-020

COLUMBIA COUNTY PROPERTY

BUILDING CHARACTERISTICS

ELEMENT	CD	CONSTRUCTION
Exterior Wall	16	WD FR STUC 100
Roof Structur	03	GABLE/HIP 100
Roof Cover	03	COMP SHNGL 100
Interior Wall	05	DRYWALL 100
Interior Floo	14	CARPET 90
Interior Floo	08	SHT VINYL 10
Air Condition	03	CENTRAL 100
Heating Type	04	AIR DUCTED 100
Bedrooms		3 100
Bathrooms		2 100
Frame		N/A 100
Stories	1.5	1.5 100
Architectual	05	CONV 100
Units		0 100
Condition Adj	03	03 100
Kitchen Adjus	01	01 100
Quality	05	05
DOR CODE	0100	SINGLE FAMILY
MAP NUM		MKT AREA 02
NEIGHBORHOOD/LOC	32617.010	1.00/

AREA TYPE	TOTAL GROSS AREA	PCT OF BASE	YEAR	TOT ADJ AREA	SUBAREA MARKET VALUE
BAS	1,320	100		1,320	108,443
FUS	436	100		436	35,819
UGR	676	45		304	24,975
UOP	32	20		6	493
UOP	320	20		64	5,258
UST	117	45		53	4,354
TOTALS	2,901			2,183	179,341

MARKET ADJUSTMENTS

TYPE	MDL	EFF. AREA	TOT ADJ PTS	EFF. BASE RATE	REPL. COST NEW	AYB	EYB	ECON	FNCT		NORM	% COND
0100	01	2,183	112.8498	126.39	275,909	1981	1981	0	0	0	35.00	65.00

1 SINGLE FAM 100% - 2015 Heated Area: 1756 HX Base Yr 2015

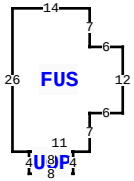

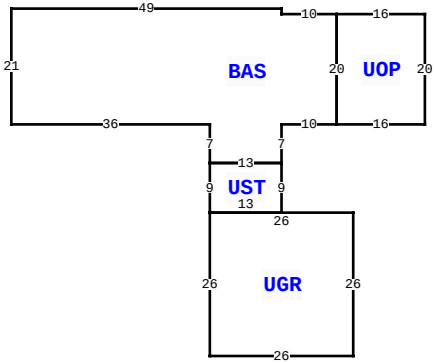

544 SW BANGOR WAY, FORT WHITE

BLD DATE		LGL DATE	
XF DATE		LAND DATE	05/14/2024 MLU
INC DATE		AG DATE	

VALUATION SUMMARY

VALUATION BY		STANDARD
Tax Group: 3	Tax Dist:	
BUILDING MARKET VALUE		179,341
TOTAL MARKET OB/XF VALUE		500
TOTAL LAND VALUE - MARKET		50,000
TOTAL MARKET VALUE		229,841
SOH/AGL Deduction		100,757
ASSESSED VALUE		129,084
TOTAL EXEMPTION VALUE	HX HB	51,411
BASE TAXABLE VALUE		77,673
TOTAL JUST VALUE		229,841
NCON VALUE		0
INCOME VALUE		
PREVIOUS YEAR MKT VALUE		229,841

SALE:4:1: REPLACING AGREEMENT WITH WD

SALE:3:1: LOT 20 MCCLINTON FARMS

SALE:2:1: LOT 20 MCCLINTON FARMES REMODELED HOUSE

PERMIT NUM	DESCRIPTION	AMT	ISSUED
8382	ADDN SFR	17,000	05/16/1994

SALES DATA

OFF RECORD Number	DATE	TYPE INST	Q U /	V I /	RSN CD	SALE PRICE
1277/0998	7/03/2014	WD	Q	I	01	109,000
GRANTOR: DAVID H GARDNER						
GRANTEE: KENNETH EDWARD & TA						
1272/1729	2/28/2014	WD	U	I	12	105,300
GRANTOR: FEDERAL HOME LOAN MOR						
GRANTEE: DAVID H GARDNER						

BUILDING NOTES

BUILDING DIMENSIONS

BAS= W10 N1 W49 S21 E36 S7 UST= S9 UGR= S26 E26 N26 W26$ E13 N9 W13$ E13 N7 E10 UOP= E16 N20 W16 S20$ N20$ PTR= N30 FUS= N7 E6 N12 W6 N7 W14 S26 E3 UOP= S4 E8 N4 W8$ E11$ S30$.

EXTRA FEATURES

LN	OB/XF CODE	DESCRIPTION	BLD	CAP	L	W	UNITS	UT	Adj R	ADJ UNIT PRICE	ORIG COND	YEAR ON	YEAR ACTUAL	Q	% COND	OB/XF MKT VALUE	NOTES
1	0020	BARN,FR	0	100	0	0	1.00	UT	0.00	0.00	100	0	0	3	100	300	
2	0252	LEAN-TO W/	0	100	0	0	1.00	UT	0.00	0.00	100	2013	2013	3	100	100	
3	0070	CARPORT UF	0	100	0	0	1.00	UT	0.00	0.00	100	2013	2013	3	100	50	
4	0252	LEAN-TO W/	0	100	0	0	1.00	UT	0.00	0.00	100	2013	2013	3	100	50	

LAND DESCRIPTION

TOTAL OB/XF 500

LN	USE CODE	CLS	LAND USE DESCRIPTION	CAP	RD	LOC ZONE	FRONT	DEPTH	TOT LND UTS	UNIT TYPE	DT	DPTH FACT	% COND	TOT ADJ	UNIT PRICE	ADJ UNIT PRICE	LAND VALUE	OTHER ADJUSTMENTS AND NOTES	YEAR	DENSITY	DECL	FRZ	YR	CONSRV
1	0100	C	SFR	100		00	0.00	0.00	5.00	AC		1.00	1.00	1.00	10,000.00	10,000.00	50,000							

REVIEW DATE 10/31/2017 BY DF Total Acres: 5.00 Total Land Value: 50,000 Market: 0 Agricultural: 0 Common: 50,000 PRINTED 03/26/2026 BY SYS