COMM INTERS E R/W BURKE ST & W R
518.67 FT FOR POB, CONT N 155.55
FT, S 81.61 FT, SW 70.61 FT, S 2

DICKS CLINTON F JR/WILLIAMS GUY N AS TRUSTEES
GATEWAY LAND TRUST 1, 10385 S U S HWY 441
LAKE CITY, FL 32025

2026

31-3S-17-06163-000

COLUMBIA COUNTY PROPERTY

BUILDING CHARACTERISTICS

ELEMENT	CD	CONSTRUCTION
Exterior Wall	25	MOD METAL 100
Roof Structur	10	STEEL FRME 100
Roof Cover	12	MODULAR MT 100
Interior Wall	01	MINIMUM 100
Interior Floo	03	CONC FINSH 100
Air Condition	03	CENTRAL 100
Heating Type	03	FORCED AIR 100
Plumbing		11 100
Frame	05	STEEL 100
Story Height		0 100
RMS		19 100
Stories	1.	1. 100
Units		3 100
Condition Adj	01	01 100
Quality	04	04
DOR CODE	4817	WHSE STORAGE/OFFICE
MAP NUM		MKT AREA 06
NEIGHBORHOOD/LOC	31317.00	1.00/

AREA TYPE	TOTAL GROSS AREA	PCT OF BASE	YEAR	TOT ADJ AREA	SUBAREA MARKET VALUE
AOF	1,120	110		1,232	8,782
AOF	1,120	110		1,232	8,782
AOF	1,152	110		1,267	9,031
BAS	7,968	100		7,968	56,796
CAN	332	30		100	713
TOTALS	11,692			11,799	84,103

MARKET ADJUSTMENTS

TYPE	MDL	EFF. AREA	TOT ADJ PTS	EFF. BASE RATE	REPL. COST NEW	AYB	EYB	ECON	FNCT	AP	NORM	% COND
8400	04	11,799	59.4052	23.76	280,344	1969	1969	0	0	20	50.00	30.00

1 WAREH STOR 0% - 0 Heated Area: 11360 HX Base Yr

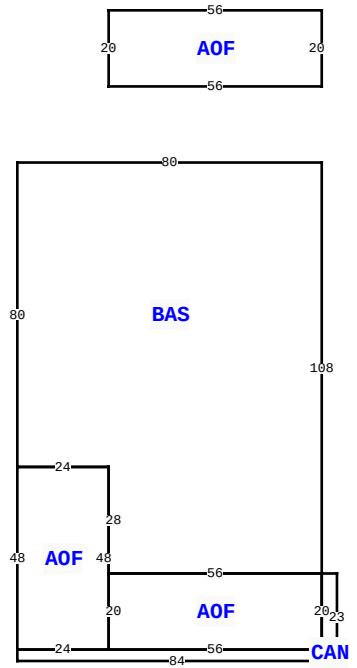

289 NW BURK AVE, LAKE CITY

BLD DATE		LGL DATE	
XF DATE		LAND DATE	04/27/2022 MLU
INC DATE		AG DATE	

VALUATION SUMMARY

VALUATION BY	STANDARD
Tax Group: 1	Tax Dist:
BUILDING MARKET VALUE	269,007
TOTAL MARKET OB/XF VALUE	10,176
TOTAL LAND VALUE - MARKET	97,956
TOTAL MARKET VALUE	377,139
SOH/AGL Deduction	0
ASSESSED VALUE	377,139
TOTAL EXEMPTION VALUE	0
BASE TAXABLE VALUE	377,139
TOTAL JUST VALUE	377,139
NCON VALUE	0
INCOME VALUE	
PREVIOUS YEAR MKT VALUE	367,593

PERMIT NUM	DESCRIPTION	AMT	ISSUED
2265	REMODEL	75	08/16/2011

SALES DATA

OFF RECORD Number	DATE	TYPE INST	Q U	V I	RSN CD	SALE PRICE
0888/1833	9/24/1999	WD	Q	I		1,232,000
GRANTOR: RISSER PETROLEUM INC						
GRANTEE: GATEWAY LAND TRUST						
0789/1920	4/01/1994	WD	U	I	35	1,332,000
GRANTOR: P N RISSER JR						
GRANTEE: RISSER PETROLEUM IN						

BUILDING NOTES

BUILDING DIMENSIONS

BAS= W80 S80 AOF= S48 E24 N48 W24$ E24 S28 AOF= S20 CAN= W24 S3 E84 N23 W4 S20 W56$ E56 N20 W56$ E56 N108 $ PTR=N40 AOF= W56 S20 E56 N20$S40$.

EXTRA FEATURES

LN	OB/XF CODE	DESCRIPTION	BLD	CAP	L	W	UNITS	UT	Adj R	ADJ UNIT PRICE	ORIG COND	YEAR ON	YEAR ACTUAL	Q	% COND	OB/XF MKT VALUE	NOTES
1	0260	PAVEMENT-A	0	0	0	0	1.00	UT	5,800.00	5,800.00	75	1999	1999	3	75	4,350	
2	0140	CLFENCE 6	0	0	0	0	210.00	UT	3.50	3.50	100	2000	2000	3	100	735	
3	0166	CONC,PAVMT	0	0	0	0	30.00	UT	15.00	15.00	100	2000	2000	3	100	450	
4	0166	CONC,PAVMT	0	0	0	0	1.00	UT	0.00	0.00	100	0	0	3	100	1,000	
5	0166	CONC,PAVMT	0	0	0	0	1.00	UT	500.00	500.00	80	0	0	3	80	400	
6	0060	CARPORT F	0	0	43	26	1,118.00	UT	3.00	3.00	80	1993	1993	3	80	2,683	
7	0258	PATIO	0	0	31	12	372.00	UT	3.00	3.00	50	2008	2008	3	50	558	

LAND DESCRIPTION

TOTAL OB/XF 10,176

LN	USE CODE	CLS	LAND USE DESCRIPTION	CAP	RD	LOC ZONE	FRONT	DEPTH	TOT LND UTS	UNIT TYPE	DT	DPTH FACT	% COND	TOT ADJ	UNIT PRICE	ADJ UNIT PRICE	LAND VALUE	OTHER ADJUSTMENTS AND NOTES	YEAR	DENSITY	DECL	FRZ	YR	CONSRV
1	4817	C	STORG/ OFF	0		*CG	156.00	204.00	150,701.00	SF		1.00	1.00	0.65	1.00	0.65	97,956							

REVIEW DATE 12/15/2021 BY ME Total Acres: 3.46 Total Land Value: 97,956 Market: 0 Agricultural: 0 Common: 97,956 PRINTED 05/08/2026 BY SYS

COMM INTERS E R/W BURKE ST & W R
518.67 FT FOR POB, CONT N 155.55
FT, S 81.61 FT, SW 70.61 FT, S 2

DICKS CLINTON F JR/WILLIAMS GUY N AS TRUSTEES
GATEWAY LAND TRUST 1, 10385 S U S HWY 441
LAKE CITY, FL 32025

2026

31-3S-17-06163-000

BUILDING CHARACTERISTICS

ELEMENT	CD	CONSTRUCTION
Exterior Wall	19	COMMON BRK 100
Roof Structur	03	GABLE/HIP 100
Roof Cover	03	COMP SHNGL 100
Interior Wall	05	DRYWALL 100
Interior Floo	14	CARPET 90
Interior Floo	06	VINYL ASB 10
Air Condition	03	CENTRAL 100
Heating Type	04	AIR DUCTED 100
Bedrooms		3 100
Bathrooms		2 100
Frame	01	NONE 100
Stories	1.	1. 100
Architectual	05	CONV 100
Units		0 100
Condition Adj	01	01 100
Kitchen Adjus	01	01 100
Quality	04	04
DOR CODE	4817	WHSE STORAGE/OFFICE
MAP NUM		MKT AREA 06
NEIGHBORHOOD/LOC	31317.00	1.00/

AREA TYPE	TOTAL GROSS AREA	PCT OF BASE	YEAR	TOT ADJ AREA	SUBAREA MARKET VALUE
BAS	1,751	100		1,751	84,250
FCP	1,075	25		269	12,943
FGR	420	55		231	11,115
FOP	102	30		31	1,492
FOP	119	30		36	1,732
TOTALS	3,467			2,318	111,530

MARKET ADJUSTMENTS

TYPE	MDL	EFF. AREA	TOT ADJ PTS	EFF. BASE RATE	REPL. COST NEW	AYB	EYB	ECON	FNCT	AP	NORM	% COND
0100	01	2,318	84.4094	96.23	223,061	1964	1964	0	0	15	35.00	50.00

2 SINGLE FAM 0% - 0 Heated Area: 1751 HX Base Yr

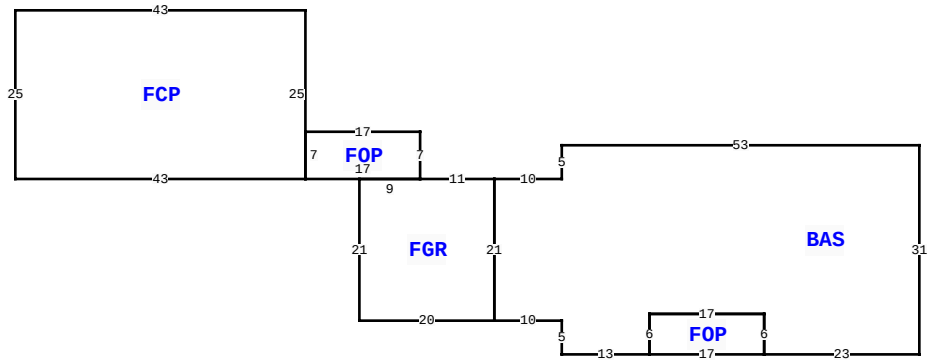

289 NW BURK AVE, LAKE CITY

BLD DATE		LGL DATE	
XF DATE		LAND DATE	04/27/2022 MLU
INC DATE		AG DATE	

COLUMBIA COUNTY PROPERTY

PAGE 2 of 3 1

VALUATION SUMMARY

VALUATION BY	STANDARD
Tax Group: 1	Tax Dist:
BUILDING MARKET VALUE	269,007
TOTAL MARKET OB/XF VALUE	10,176
TOTAL LAND VALUE - MARKET	97,956
TOTAL MARKET VALUE	377,139
SOH/AGL Deduction	0
ASSESSED VALUE	377,139
TOTAL EXEMPTION VALUE	0
BASE TAXABLE VALUE	377,139
TOTAL JUST VALUE	377,139
NCON VALUE	0
INCOME VALUE	
PREVIOUS YEAR MKT VALUE	367,593

PERMIT NUM	DESCRIPTION	AMT	ISSUED

SALES DATA

OFF RECORD Number	DATE	TYPE INST	Q U	V I	RSN CD	SALE PRICE
0888/1833	9/24/1999	WD	Q	I		1,232,000
GRANTOR: RISSER PETROLEUM INC						
GRANTEE: GATEWAY LAND TRUST						
0789/1920	4/01/1994	WD	U	I	35	1,332,000
GRANTOR: P N RISSER JR						
GRANTEE: RISSER PETROLEUM IN						

BUILDING NOTES

BUILDING DIMENSIONS

BAS=[ORIG=0,0] W53 S5 W10 S21 E10 S5 E13 N6 E17 S6 E23 N31 $
FGR=[ORIG=-63,5] W11 W9 S21 E20 N21 $
FOP=[ORIG=-74,5] N7 W17 S7 E17 $
FOP=[ORIG=-40,31] E17 N6 W17 S6 $
FCP=[ORIG=-134,-20] E43 S25 W43 N25 $
.

EXTRA FEATURES

L N	OB/XF CODE	DESCRIPTION	BLD	CAP	L	W	UNITS	UT	Adj R	ADJ UNIT PRICE	ORIG COND	YEAR ON	YEAR ACTUAL	Q	% COND	OB/XF MKT VALUE	NOTES

LAND DESCRIPTION

TOTAL OB/XF 0

L N	USE CODE	CLS	LAND USE DESCRIPTION	CAP	R D	LOC ZONE	FRONT	DEPTH	TOT LND UTS	UNIT TYPE	D T	DPTH FACT	% COND	TOT ADJ	UNIT PRICE	ADJ UNIT PRICE	LAND VALUE	OTHER ADJUSTMENTS AND NOTES	YEAR	DENSITY	DECL	FRZ	YR	CONSRV

REVIEW DATE 12/15/2021 BY ME Total Acres: 3.46 Total Land Value: 97,956 Market: 0 Agricultural: 0 Common: 97,956 PRINTED 05/08/2026 BY SYS

COMM INTERS E R/W BURKE ST & W R
518.67 FT FOR POB, CONT N 155.55
FT, S 81.61 FT, SW 70.61 FT, S 2

DICKS CLINTON F JR/WILLIAMS GUY N AS TRUSTEES
GATEWAY LAND TRUST 1, 10385 S U S HWY 441
LAKE CITY, FL 32025

2026

31-3S-17-06163-000

COLUMBIA COUNTY PROPERTY

BUILDING CHARACTERISTICS

ELEMENT	CD	CONSTRUCTION
Exterior Wall	15	CONC BLOCK 80
Exterior Wall	08	WD OR PLY 20
Roof Structur	03	GABLE/HIP 100
Roof Cover	03	COMP SHNGL 100
Interior Wall	05	DRYWALL 100
Interior Floo	14	CARPET 90
Interior Floo	06	VINYL ASB 10
Air Condition	03	CENTRAL 100
Heating Type	04	AIR DUCTED 100
Bedrooms		3 100
Bathrooms		2 100
Frame	01	NONE 100
Stories	1.	1. 100
Architectual	05	CONV 100
Units		0 100
Condition Adj	01	01 100
Kitchen Adjus	01	01 100
Quality	04	04
DOR CODE	4817	WHSE STORAGE/OFFICE
MAP NUM		MKT AREA 06
NEIGHBORHOOD/LOC	31317.00	1.00/

AREA TYPE	TOTAL GROSS AREA	PCT OF BASE	YEAR	TOT ADJ AREA	SUBAREA MARKET VALUE
BAS	1,545	100		1,545	72,159
FOP	16	30		5	234
FOP	70	30		21	981
TOTALS	1,631			1,571	73,374

MARKET ADJUSTMENTS

TYPE	MDL	EFF. AREA	TOT ADJ PTS	EFF. BASE RATE	REPL. COST NEW	AYB	EYB	ECON	FNCT	AP	NORM	% COND
0100	01	1,571	81.9364	93.41	146,747	1964	1964	0	0	15	35.00	50.00

3 SINGLE FAM 0% - 0 Heated Area: 1545 HX Base Yr

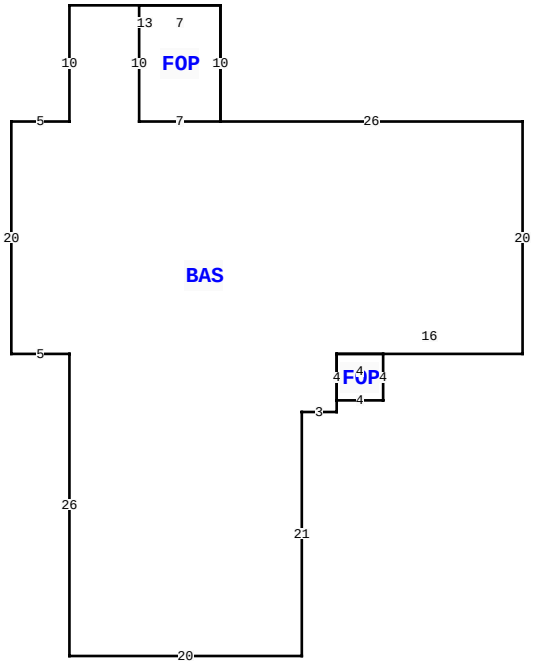

289 NW BURK AVE, LAKE CITY

BLD DATE		LGL DATE	
XF DATE		LAND DATE	04/27/2022 MLU
INC DATE		AG DATE	

VALUATION SUMMARY

VALUATION BY	STANDARD
Tax Group: 1	Tax Dist:
BUILDING MARKET VALUE	269,007
TOTAL MARKET OB/XF VALUE	10,176
TOTAL LAND VALUE - MARKET	97,956
TOTAL MARKET VALUE	377,139
SOH/AGL Deduction	0
ASSESSED VALUE	377,139
TOTAL EXEMPTION VALUE	0
BASE TAXABLE VALUE	377,139
TOTAL JUST VALUE	377,139
NCON VALUE	0
INCOME VALUE	
PREVIOUS YEAR MKT VALUE	367,593

PERMIT NUM	DESCRIPTION	AMT	ISSUED

SALES DATA

OFF RECORD Number	DATE	TYPE INST	Q U	V I	RSN CD	SALE PRICE
0888/1833	9/24/1999	WD	Q	I		1,232,000
GRANTOR: RISSER PETROLEUM INC						
GRANTEE: GATEWAY LAND TRUST						
0789/1920	4/01/1994	WD	U	I	35	1,332,000
GRANTOR: P N RISSER JR						
GRANTEE: RISSER PETROLEUM IN						

BUILDING NOTES

BUILDING DIMENSIONS

BAS= W26 FOP= N10 W7 S10 E7$ N10 W13 S10 W5 S20 E5 S26 E20 N21 E3 N1 FOP= E4 N4 W4 S4$ N4 E16 N20$.

EXTRA FEATURES

L N	OB/XF CODE	DESCRIPTION	BLD	CAP	L	W	UNITS	UT	Adj R	ADJ UNIT PRICE	ORIG COND	YEAR ON	YEAR ACTUAL	Q	% COND	OB/XF MKT VALUE	NOTES

LAND DESCRIPTION

TOTAL OB/XF 0

L N	USE CODE	CLS	LAND USE DESCRIPTION	CAP	R D	LOC ZONE	FRONT	DEPTH	TOT LND UTS	UNIT TYPE	D T	DPTH FACT	% COND	TOT ADJ	UNIT PRICE	ADJ UNIT PRICE	LAND VALUE	OTHER ADJUSTMENTS AND NOTES	YEAR	DENSITY	DECL	FRZ	YR	CONSRV

REVIEW DATE 12/15/2021 BY ME Total Acres: 3.46 Total Land Value: 97,956 Market: 0 Agricultural: 0 Common: 97,956 PRINTED 05/08/2026 BY SYS