LOT 27 FAIRFIELD HILLS S/D.
ORB 454-601, 883-1796, 936-466

SMITH JOSEPH M/SMITH ROSEMARIE M
221 NW FETT WAY
LAKE CITY, FL 32055

2026

29-3S-16-02390-027

COLUMBIA COUNTY PROPERTY

BUILDING CHARACTERISTICS

ELEMENT	CD	CONSTRUCTION
Exterior Wall	10	ABOVE AVG. 100
Roof Structur	03	GABLE/HIP 100
Roof Cover	12	MODULAR MT 100
Interior Wall	05	DRYWALL 100
Interior Floo	12	HARDWOOD 70
Interior Floo	14	CARPET 30
Air Condition	03	CENTRAL 100
Heating Type	04	AIR DUCTED 100
Bedrooms		4 100
Bathrooms		3 100
Frame	01	NONE 100
Stories	1.	1. 100
Architectual	05	CONV 100
Units		0 100
Condition Adj	03	03 100
Kitchen Adjus	01	01 100
Quality	07	07
DOR CODE	0100	SINGLE FAMILY
MAP NUM		MKT AREA 01
NEIGHBORHOOD/LOC	29316.010	1.00/

AREA TYPE	TOTAL GROSS AREA	PCT OF BASE	YEAR	TOT ADJ AREA	SUBAREA MARKET VALUE
BAS	2,249	100		2,249	207,539
FGR	460	55		253	23,347
FOP	176	30		53	4,891
FSP	448	40		179	16,518
UDU	240	55		132	12,181
TOTALS	3,573			2,866	264,476

MARKET ADJUSTMENTS

TYPE	MDL	EFF. AREA	TOT ADJ PTS	EFF. BASE RATE	REPL. COST NEW	AYB	EYB	ECON	FNCT		NORM	% COND
0100	01	2,866	126.7596	141.97	406,886	1987	1987	0	0	0	35.00	65.00

1 SINGLE FAM 100% - 2014 Heated Area: 2249 HX Base Yr 2014

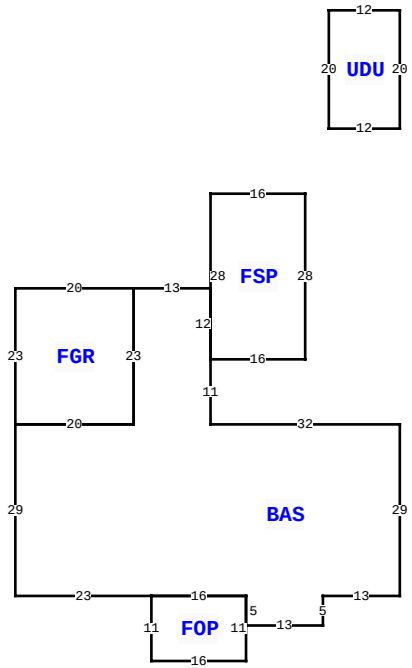

221 NW FETT WAY, LAKE CITY

BLD DATE		LGL DATE	
XF DATE		LAND DATE	04/22/2026 MLU
INC DATE		AG DATE	

VALUATION SUMMARY

VALUATION BY		STANDARD
Tax Group: 3	Tax Dist:	
BUILDING MARKET VALUE		264,476
TOTAL MARKET OB/XF VALUE		4,920
TOTAL LAND VALUE - MARKET		68,850
TOTAL MARKET VALUE		338,246
SOH/AGL Deduction		108,885
ASSESSED VALUE		229,361
TOTAL EXEMPTION VALUE	HX HB 13	229,361
BASE TAXABLE VALUE		0
TOTAL JUST VALUE		338,246
NCON VALUE		0
INCOME VALUE		
PREVIOUS YEAR MKT VALUE		333,656

LAND:2:1: JOINS LOTS 21 & 22 - 12.51 TOTAL ACRES

PERMIT NUM	DESCRIPTION	AMT	ISSUED

SALES DATA

OFF RECORD Number	DATE	TYPE INST	Q U	V I	RSN CD	SALE PRICE
1266/2227	12/12/2013	WD	Q	I	01	222,000
GRANTOR: DENNIS & DARLENE HART						
GRANTEE: JOSEPH M & ROSEMARI						
0936/0466	9/28/2001	WD	Q	I		152,000
GRANTOR: GILLESPIE						
GRANTEE: DENNIS & DARLENE HA						

BUILDING NOTES

BUILDING DIMENSIONS

BAS= W32 N11 FSP= E16 N28 W16 S28$ N12 W13 FGR= W20 S23 E20 N23$ S23 W20 S29 E23 FOP= S11 E16 N11 W16$ E16 S5 E13 N5 E13 N29$ PTR=N50 UDU= N20 W12 S20 E12$ S50$.

EXTRA FEATURES

LN	OB/XF CODE	DESCRIPTION	BLD	CAP	L	W	UNITS	UT	Adj R	ADJ UNIT PRICE	ORIG COND	YEAR ON	YEAR ACTUAL	Q	% COND	OB/XF MKT VALUE	NOTES
1	0166	CONC,PAVMT	0	100	18	60	1,080.00	UT	1.50	1.50	100	2000	2000	3	100	1,620	
2	0120	CLFENCE 4	0	100	0	0	1.00	UT	0.00	0.00	100	2005	2005	3	100	800	
3	0180	FPLC 1STRY	0	100	0	0	1.00	UT	2,000.00	2,000.00	100	0	0	3	100	2,000	
4	0294	SHED WOOD/	0	100	0	0	1.00	UT	0.00	0.00	100	0	0	3	100	500	

LAND DESCRIPTION

TOTAL OB/XF 4,920

LN	USE CODE	CLS	LAND USE DESCRIPTION	CAP	RD	LOC ZONE	FRONT	DEPTH	TOT LND UTS	UNIT TYPE	DT	DPTH FACT	% COND	TOT ADJ	UNIT PRICE	ADJ UNIT PRICE	LAND VALUE	OTHER ADJUSTMENTS AND NOTES	YEAR	DENSITY	DECL	FRZ	YR	CONSRV
1	0100	C	SFR	100		A-3	0.00	0.00	4.59	AC		1.00	1.00	1.00	15,000.00	15,000.00	68,850							

REVIEW DATE 03/01/2023 BY KS Total Acres: 4.59 Total Land Value: 68,850 Market: 0 Agricultural: 0 Common: 68,850 PRINTED 06/08/2026 BY SYS