BEG INTERS OF N LINE OF SEC & E
FT, S 350 FT, W 320 FT, N 350 FT
POB. (BEING IN NE1/4 OF NE1/4 E

WILSON RUSSELL J
16955 SW STATE ROAD 47
FT WHITE, FL 32038

2026

28-6S-16-03959-001

COLUMBIA COUNTY PROPERTY

BUILDING CHARACTERISTICS

ELEMENT	CD	CONSTRUCTION
Exterior Wall	05	AVERAGE 50
Exterior Wall	19	COMMON BRK 50
Roof Structur	03	GABLE/HIP 100
Roof Cover	03	COMP SHNGL 100
Interior Wall	05	DRYWALL 100
Interior Floo	08	SHT VINYL 50
Interior Floo	14	CARPET 50
Air Condition	03	CENTRAL 100
Heating Type	04	AIR DUCTED 100
Bedrooms		3 100
Bathrooms		3 100
Frame	01	NONE 100
Stories	1.5	1.5 100
Architectual	05	CONV 100
Units		0 100
Condition Adj	01	01 100
Kitchen Adjus	01	01 100
Quality	03	03
DOR CODE	0100	SINGLE FAMILY
MAP NUM		MKT AREA 02
NEIGHBORHOOD/LOC	28616.00	1.00/

AREA TYPE	TOTAL GROSS AREA	PCT OF BASE	YEAR	TOT ADJ AREA	SUBAREA MARKET VALUE
BAS	2,207	100		2,207	88,222
FCP	528	25		132	5,277
FOP	18	30		5	200
FOP	112	30		34	1,359
FOP	144	30		43	1,719
FSP	88	40		35	1,399
FST	48	55		26	1,040
FUS	792	100		792	31,659
PTO	370	5		18	720
TOTALS	4,307			3,292	131,593

MARKET ADJUSTMENTS

TYPE	MDL	EFF. AREA	TOT ADJ PTS	EFF. BASE RATE	REPL. COST NEW	AYB	EYB	ECON	FNCT	AP	NORM	% COND
0100	01	3,292	77.9247	88.83	292,428	1939	1966	0	0	20	35.00	45.00

1 SINGLE FAM 100% - 0 Heated Area: 2999 HX Base Yr

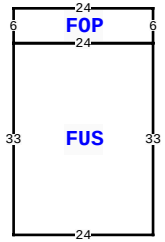

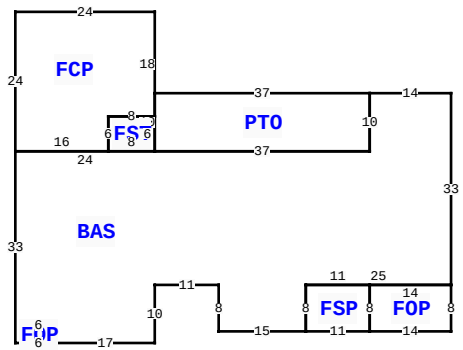

16955 SW STATE ROAD 47 , FORT WHITE

BLD DATE		LGL DATE	
XF DATE		LAND DATE	
INC DATE		AG DATE	

VALUATION SUMMARY

VALUATION BY		STANDARD
Tax Group: 3	Tax Dist:	
BUILDING MARKET VALUE		131,593
TOTAL MARKET OB/XF VALUE		9,108
TOTAL LAND VALUE - MARKET		7,710
TOTAL MARKET VALUE		148,411
SOH/AGL Deduction		61,281
ASSESSED VALUE		87,130
TOTAL EXEMPTION VALUE	HX HB	51,411
BASE TAXABLE VALUE		35,719
TOTAL JUST VALUE		148,411
NCON VALUE		0
INCOME VALUE		
PREVIOUS YEAR MKT VALUE		146,115

PERMIT NUM	DESCRIPTION	AMT	ISSUED

SALES DATA

OFF RECORD Number	DATE	TYPE INST	Q U	V I	RSN CD	SALE PRICE

BUILDING NOTES

BUILDING DIMENSIONS

BAS= W14S10W37PTO= N10 E37 S10 W37$ FST= N6 FCP= N18 W24 S24 E16 N6 E8$ W8 S6 E8$ W24 S33 E1 FOP= E6 N3 W6 S3$ N3 E6 S3 E17 N10 E11 S8 E15 FSP= N8 E11 S8 W11$ N8 E25 FOP= S8 W14 N8 E14$ N33$ PTR=N30 FUS= N33 FOP= N6 W24 S6 E24$ W24 S33 E24$ S30$.

EXTRA FEATURES

LN	OB/XF CODE	DESCRIPTION	BLD	CAP	L	W	UNITS	UT	Adj R	ADJ UNIT PRICE	ORIG COND	YEAR ON	YEAR ACTUAL	Q	% COND	OB/XF MKT VALUE	NOTES
1	0040	BARN,POLE	0	100	44	60	1.00	UT	0.00	0.00	100	0	0	3	100	2,500	
2	0011	BARN,BLK A	0	100	34	40	1.00	UT	0.00	0.00	100	0	0	3	100	3,000	
3	0180	FPLC 1STRY	0	100	0	0	1.00	UT	2,000.00	2,000.00	100	0	0	3	100	2,000	
4	0119	MASONRY WA	0	0	0	0	536.00	UT	5.00	5.00	60	1993	1993	3	60	1,608	

LAND DESCRIPTION

TOTAL OB/XF 9,108

LN	USE CODE	CLS	LAND USE DESCRIPTION	CAP	RD	LOC ZONE	FRONT	DEPTH	TOT LND UTS	UNIT TYPE	DT	DPTH FACT	% COND	TOT ADJ	UNIT PRICE	ADJ UNIT PRICE	LAND VALUE	OTHER ADJUSTMENTS AND NOTES	YEAR	DENSITY	DECL	FRZ	YR	CONSRV
1	0100	C	SFR	100		A-1	0.00	0.00	2.57	AC		1.00	1.00	1.00	3,000.00	3,000.00	7,710							

REVIEW DATE 06/10/2015 BY TW Total Acres: 2.57 Total Land Value: 7,710 Market: 0 Agricultural: 0 Common: 7,710 PRINTED 05/08/2026 BY SYS