LOT 14 MAGNOLIA PLACE S/D.
WD 1023-2400, WD 1427-952, WD 14

WATSON DONALD C/WATSON LORIS A
268 SW CYPRESSWOOD GLN
LAKE CITY, FL 32025

2026

27-5S-17-09415-114

COLUMBIA COUNTY PROPERTY

BUILDING CHARACTERISTICS

ELEMENT	CD	CONSTRUCTION
Exterior Wall	19	COMMON BRK 100
Roof Structur	08	IRREGULAR 100
Roof Cover	03	COMP SHNGL 100
Interior Wall	05	DRYWALL 100
Interior Floo	13	LAM/VNLPLK 50
Interior Floo	15	HARDTILE 50
Air Condition	03	CENTRAL 100
Heating Type	04	AIR DUCTED 100
Bedrooms		4 100
Bathrooms		2.5 100
Frame	02	WOOD FRAME 100
Stories	1.	1. 100
Architectual	05	CONV 100
Units		0 100
Condition Adj	03	03 100
Kitchen Adjus	01	01 100
Quality	07	07
DOR CODE	0100	SINGLE FAMILY
MAP NUM		MKT AREA 02
NEIGHBORHOOD/LOC	27517.00	1.00/

AREA TYPE	TOTAL GROSS AREA	PCT OF BASE	YEAR	TOT ADJ AREA	SUBAREA MARKET VALUE
BAS	1,897	100		1,897	228,900
FGR	484	55		266	32,097
FGR	1,021	55		562	67,813
FOP	78	30		23	2,775
FOP	120	30		36	4,344
UOP	348	20		70	8,446
TOTALS	3,948			2,854	344,375

MARKET ADJUSTMENTS

TYPE	MDL	EFF. AREA	TOT ADJ PTS	EFF. BASE RATE	REPL. COST NEW	AYB	EYB	ECON	FNCT		NORM	% COND
0100	01	2,854	132.3080	150.83	430,469	2005	2005	0	0	0	20.00	80.00

1 SINGLE FAM 100% - 2021 Heated Area: 1897 HX Base Yr 2021

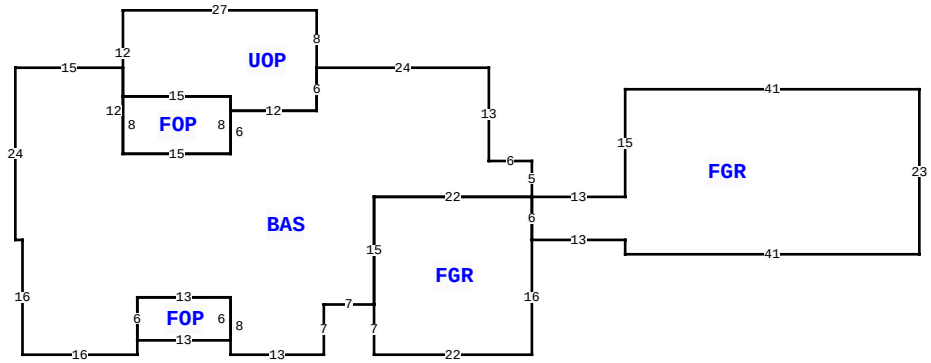

268 SW CYPRESSWOOD GLN, LAKE CITY

BLD DATE		LGL DATE	
XF DATE		LAND DATE	05/07/2026 MLU
INC DATE		AG DATE	

VALUATION SUMMARY

VALUATION BY		STANDARD
Tax Group: 3	Tax Dist:	
BUILDING MARKET VALUE		344,375
TOTAL MARKET OB/XF VALUE		9,130
TOTAL LAND VALUE - MARKET		65,000
TOTAL MARKET VALUE		418,505
SOH/AGL Deduction		125,184
ASSESSED VALUE		293,321
TOTAL EXEMPTION VALUE	HX HB	51,411
BASE TAXABLE VALUE		241,910
TOTAL JUST VALUE		418,505
NCON VALUE		0
INCOME VALUE		
PREVIOUS YEAR MKT VALUE		406,684

PERMIT NUM	DESCRIPTION	AMT	ISSUED
000042210	Roof Replacement	25,000	06/24/2021
22788	SFR	565	02/08/2005

SALES DATA

OFF RECORD Number	DATE	TYPE INST	Q U	V I	RSN CD	SALE PRICE
1427/956	12/30/2020	WD	Q	I	01	339,000
GRANTOR: DOTSON DENNIS D						
GRANTEE: WATSON DONALD C						
1427/952	12/21/2020	WD	U	I	30	100
GRANTOR: GLENN FARMS INC						
GRANTEE: DOTSON DENNIS D						

BUILDING NOTES

BUILDING DIMENSIONS

BAS= W24 UOP= N8 W27 S12 FOP= S8 E15 N8 W15$ E15 S2 E12 N6$ S6 W12 S6 W15 N12 W15 S24 E1 S16 E16 N2 FOP= E13 N6 W13 S6$ N6 E13 S8 E13 N7 E7 FGR= S7 E22 N16 FGR= E13 S2 E41 N23 W41 S15 W13 S6$ N6 W22 S15$ N15 E22 N5 W6 N13$.

EXTRA FEATURES

LN	OB/XF CODE	DESCRIPTION	BLD	CAP	L	W	UNITS	UT	Adj R	ADJ UNIT PRICE	ORIG COND	YEAR ON	YEAR ACTUAL	Q	% COND	OB/XF MKT VALUE	NOTES
1	0166	CONC,PAVMT	0	100	0	0	2,852.00	UT	2.50	2.50	100	2005	2005	3	100	7,130	
2	0180	FPLC 1STRY	1	100	0	0	1.00	UT	2,000.00	2,000.00	100	2021	2005		100	2,000	

LAND DESCRIPTION

TOTAL OB/XF 9,130

LN	USE CODE	CLS	LAND USE DESCRIPTION	CAP	RD	LOC ZONE	FRONT	DEPTH	TOT LND UTS	UNIT TYPE	DT	DPTH FACT	% COND	TOT ADJ	UNIT PRICE	ADJ UNIT PRICE	LAND VALUE	OTHER ADJUSTMENTS AND NOTES	YEAR	DENSITY	DECL	FRZ	YR	CONSRV
1	0100	C	SFR	100		A-1	0.00	0.00	1.00	LT		1.00	1.00	1.00	65,000.00	65,000.00	65,000							

REVIEW DATE 09/05/2017 BY DF Total Acres: 5.00 Total Land Value: 65,000 Market: 0 Agricultural: 0 Common: 65,000 PRINTED 05/08/2026 BY SYS