(AKA PART OF LOT 20 BUIES TRACT
THE N 291.30 FT OF S 741.30 FT O
SE1/4, EX 30 FT OFF W SIDE FOR R

JOHNSON LONNY D JR/JOHNSON KELLY M
235 SW TALL PINE CT
LAKE CITY, FL 32024-1987

2026

24-4S-15-00384-024

COLUMBIA COUNTY PROPERTY

BUILDING CHARACTERISTICS

ELEMENT	CD	CONSTRUCTION
Exterior Wall	19	COMMON BRK 90
Exterior Wall	08	WD OR PLY 10
Roof Structur	03	GABLE/HIP 100
Roof Cover	14	PREFIN MT 100
Interior Wall	05	DRYWALL 100
Interior Floo	14	CARPET 90
Interior Floo	06	VINYL ASB 10
Air Condition	03	CENTRAL 100
Heating Type	04	AIR DUCTED 100
Bedrooms		3 100
Bathrooms		1 100
Frame	01	NONE 100
Stories	1.	1. 100
Architectual	05	CONV 100
Units		0 100
Condition Adj	03	03 100
Kitchen Adjus	01	01 100
Quality	05	05
DOR CODE	0100	SINGLE FAMILY
MAP NUM		MKT AREA 02
NEIGHBORHOOD/LOC	24415.010	1.00/

AREA TYPE	TOTAL GROSS AREA	PCT OF BASE	YEAR	TOT ADJ AREA	SUBAREA MARKET VALUE
BAS	1,812	100		1,812	148,732
FCP	600	25		150	12,312
FOP	144	30		43	3,530
FSP	72	40		29	2,380
FSP	340	40		136	11,163
TOTALS	2,968			2,170	178,118

MARKET ADJUSTMENTS

TYPE	MDL	EFF. AREA	TOT ADJ PTS	EFF. BASE RATE	REPL. COST NEW	AYB	EYB	ECON	FNCT		NORM	% COND
0100	01	2,170	110.7740	126.28	274,028	1978	1978	0	0	0	35.00	65.00

1 SINGLE FAM 100% - 2013 Heated Area: 1812 HX Base Yr 2013

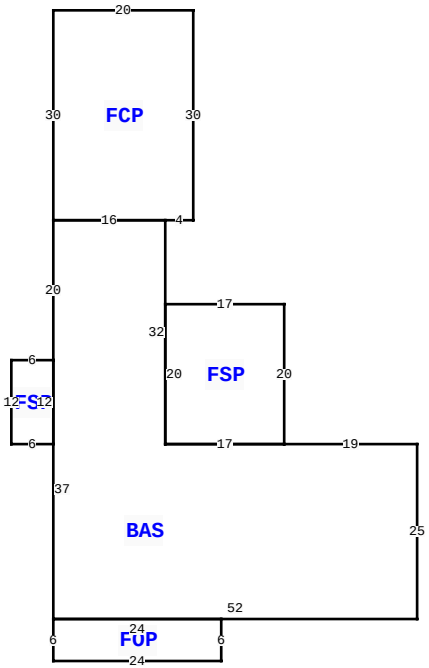

235 SW TALL PINE CT, LAKE CITY

BLD DATE		LGL DATE	
XF DATE		LAND DATE	05/06/2026 MLU
INC DATE		AG DATE	

VALUATION SUMMARY

VALUATION BY		STANDARD
Tax Group: 3	Tax Dist:	
BUILDING MARKET VALUE		178,118
TOTAL MARKET OB/XF VALUE		3,360
TOTAL LAND VALUE - MARKET		88,440
TOTAL MARKET VALUE		269,918
SOH/AGL Deduction		134,919
ASSESSED VALUE		134,999
TOTAL EXEMPTION VALUE	HX HB VX	56,411
BASE TAXABLE VALUE		78,588
TOTAL JUST VALUE		269,918
NCON VALUE		0
INCOME VALUE		
PREVIOUS YEAR MKT VALUE		248,376

PERMIT NUM	DESCRIPTION	AMT	ISSUED

SALES DATA

OFF RECORD Number	DATE	TYPE INST	Q / U	V / I	RSN CD	SALE PRICE
1237/0368	6/20/2012	WD	Q	I	01	125,000

GRANTOR: RACHEL M MIMS (UNREMA

GRANTEE: LONNY D JR & KELLY

BUILDING NOTES

BUILDING DIMENSIONS

BAS= W19 FSP= N20 W17 S20 E17$ W17 N32 FCP= E4 N30 W20 S30 E16$ W16 S20 FSP= W6S12 E6 N12$ S37 FOP= S6 E24 N6 W24$ E52 N25 $.

EXTRA FEATURES

LN	OB/XF CODE	DESCRIPTION	BLD	CAP	L	W	UNITS	UT	Adj R	ADJ UNIT PRICE	ORIG COND	YEAR ON	YEAR ACTUAL	Q	% COND	OB/XF MKT VALUE	NOTES
1	0294	SHED WOOD/	0	100	20	24	480.00	UT	4.50	4.50	100	1993	1993	3	100	2,160	
2	0190	FPLC PF	0	100	0	0	1.00	UT	1,200.00	1,200.00	100	0	0	3	100	1,200	

LAND DESCRIPTION

TOTAL OB/XF 3,360

LN	USE CODE	CLS	LAND USE DESCRIPTION	CAP	RD	LOC ZONE	FRONT	DEPTH	TOT LND UTS	UNIT TYPE	DT	DPTH FACT	% COND	TOT ADJ	UNIT PRICE	ADJ UNIT PRICE	LAND VALUE	OTHER ADJUSTMENTS AND NOTES	YEAR	DENSITY	DECL	FRZ	YR	CONSRV
1	0100	C	SFR	100		A-1	0.00	0.00	7.37	AC		1.00	1.00	1.00	12,000.00	12,000.00	88,440							

REVIEW DATE 05/13/2025 BY KS Total Acres: 7.37 Total Land Value: 88,440 Market: 0 Agricultural: 0 Common: 88,440 PRINTED 05/12/2026 BY SYS