LOT 38 COBBLESTONE UNIT 2.

WD 1044-1222, WD 1432-2715

SIGRIST BRYAN S/SIGRIST EMILY S
339 NW AMBLESIDE DR
LAKE CITY, FL 32055

2026

24-3S-16-02275-138

COLUMBIA COUNTY PROPERTY

BUILDING CHARACTERISTICS

ELEMENT	CD	CONSTRUCTION
Exterior Wall	17	MSNRY STUC 100
Roof Structur	08	IRREGULAR 100
Roof Cover	03	COMP SHNGL 100
Interior Wall	05	DRYWALL 100
Interior Floo	13	LAM/VNLPLK 50
Interior Floo	15	HARDTILE 50
Air Condition	03	CENTRAL 100
Heating Type	04	AIR DUCTED 100
Bedrooms		3 100
Bathrooms		2 100
Frame	02	WOOD FRAME 100
Stories	1.	1. 100
Architectual	05	CONV 100
Units		0 100
Condition Adj	03	03 100
Kitchen Adjus	01	01 100
Quality	07	07
DOR CODE	0100	SINGLE FAMILY
MAP NUM		MKT AREA 03
NEIGHBORHOOD/LOC	24316.00	1.00/

AREA TYPE	TOTAL GROSS AREA	PCT OF BASE	YEAR	TOT ADJ AREA	SUBAREA MARKET VALUE
BAS	2,565	100		2,565	290,622
FDG	1,500	60	2023	900	101,973
FGR	776	55		427	48,380
FOP	406	30		122	13,823
FSP	406	40		162	18,355
TOTALS	5,653			4,176	473,153

MARKET ADJUSTMENTS

TYPE	MDL	EFF. AREA	TOT ADJ PTS	EFF. BASE RATE	REPL. COST NEW	AYB	EYB	ECON	FNCT		NORM	% COND
0100	01	4,176	122.7050	139.88	584,139	2006	2006	0	0	0	19.00	81.00

1 SINGLE FAM 100% - 2025 Heated Area: 2565 HX Base Yr 2025

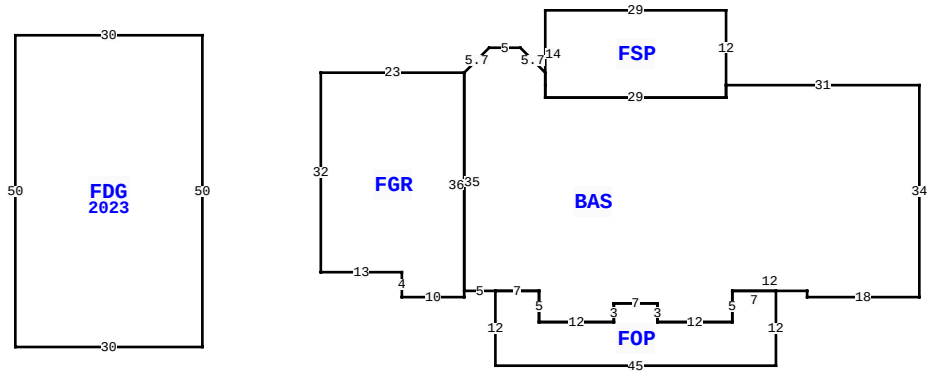

339 NW AMBLESIDE DR, LAKE CITY

BLD DATE		LGL DATE	
XF DATE		LAND DATE	05/08/2026 MLU
INC DATE		AG DATE	

VALUATION SUMMARY

VALUATION BY		STANDARD
Tax Group: 2	Tax Dist:	
BUILDING MARKET VALUE		473,153
TOTAL MARKET OB/XF VALUE		15,378
TOTAL LAND VALUE - MARKET		48,000
TOTAL MARKET VALUE		536,531
SOH/AGL Deduction		0
ASSESSED VALUE		536,531
TOTAL EXEMPTION VALUE	HX HB	51,411
BASE TAXABLE VALUE		485,120
TOTAL JUST VALUE		536,531
NCON VALUE		0
INCOME VALUE		
PREVIOUS YEAR MKT VALUE		525,983

PERMIT NUM	DESCRIPTION	AMT	ISSUED
000042860	Solar Power Syste	85,525	09/29/2021
23346	SFR	787	06/30/2005

SALES DATA

OFF RECORD Number	DATE	TYPE INST	Q U	V I	RSN CD	SALE PRICE
1432/2715	3/19/2021	WD	Q	I	01	430,000
GRANTOR: OSMOND JAMES C						
GRANTEE: SIGRIST BRYAN S						
1044/1222	4/22/2005	WD	Q	V		44,900
GRANTOR: COBBLESTONE OF COLUMB						
GRANTEE: JAMES C & INGE K OS						

EXTRA FEATURES

L N	OB/XF CODE	DESCRIPTION	BLD	CAP	L	W	UNITS	UT	Adj R	ADJ UNIT PRICE	ORIG COND	YEAR ON	YEAR ACTUAL	Q	% COND	OB/XF MKT VALUE	NOTES
1	0180	FPLC 1STRY	0	100	0	0	1.00	UT	2,000.00	2,000.00	100	2006	2006	3	100	2,000	
2	0166	CONC,PAVMT	0	100	0	0	1.00	UT	0.00	0.00	100	2006	2006	3	100	12,378	
3	0169	FENCE/WOOD	0	100	0	0	1.00	UT	1,000.00	1,000.00	100	2023	2022		100	1,000	

BUILDING NOTES

BUILDING DIMENSIONS

BAS=[ORIG=0,0] W31 S2 W29 N2 N2 U4L4 W5 D4L4 S35 E5 E7 S5 E12 N3 E7 S3 E12 N5 E12 S1 E18 N34 $
FDG=[YR=2023;ORIG=-145,-8] E30 S50 W30 N50 $
FGR=[ORIG=-73,-2] W23 S32 E13 S4 E10 N36 $
FSP=[ORIG=-31,0] N12 W29 S14 E29 N2 $
FOP=[ORIG=-68,33] S12 E45 N12 W7 S5 W12 N3 W7 S3 W12 N5 W7 $
.

LAND DESCRIPTION

TOTAL OB/XF 15,378

L N	USE CODE	CLS	LAND USE DESCRIPTION	CAP	R D	LOC ZONE	FRONT	DEPTH	TOT LND UTS	UNIT TYPE	D T	DPTH FACT	% COND	TOT ADJ	UNIT PRICE	ADJ UNIT PRICE	LAND VALUE	OTHER ADJUSTMENTS AND NOTES	YEAR	DENSITY	DECL	FRZ	YR	CONSRV
1	0100	C	SFR	100		RSF-2	0.00	0.00	1.00	LT		1.00	1.00	1.00	48,000.00	48,000.00	48,000							

REVIEW DATE 05/19/2023 BY KS Total Acres: 2.01 Total Land Value: 48,000 Market: 0 Agricultural: 0 Common: 48,000 PRINTED 05/08/2026 BY SYS