LOT 12 LAKE CITY AIRPARK S/D.
ORB 667-332, 752-354, 764-533, 7

DANNECKER WILLIAM C/DANNECKER JEAN D
355 SW AVIATION DR
LAKE CITY, FL 32025

2026

22-5S-17-09322-012

BUILDING CHARACTERISTICS

ELEMENT	CD	CONSTRUCTION
Exterior Wall	32	HARDIE BRD 100
Roof Structur	08	IRREGULAR 100
Roof Cover	14	PREFIN MT 100
Interior Wall	05	DRYWALL 100
Interior Floo	15	HARDTILE 100
Air Condition	03	CENTRAL 100
Heating Type	04	AIR DUCTED 100
Bedrooms		3 100
Bathrooms		2.5 100
Frame	02	WOOD FRAME 100
Stories	1.	1. 100
Architectual	05	CONV 100
Units		0 100
Quality	07	07

DOR CODE	0100	SINGLE FAMILY	
MAP NUM		MKT AREA	02
NEIGHBORHOOD/LOC	22517.020	1.00/	

AREA TYPE	TOTAL GROSS AREA	PCT OF BASE	YEAR	TOT ADJ AREA	SUBAREA MARKET VALUE
BAS	1,400	100		1,400	173,847
BAS	3,142	100		3,142	390,162
FGR	702	55		386	47,932
FOP	1,264	30		379	47,063
HGR	4,900	45		2,205	273,809
TOTALS	11,408			7,512	932,812

MARKET ADJUSTMENTS

TYPE	MDL	EFF. AREA	TOT ADJ PTS	EFF. BASE RATE	REPL. COST NEW	AYB	EYB	ECON	FNCT		NORM	% COND
0100	01	7,512	131.2410	149.61	1,123,870	2008	2008	0	0	0	17.00	83.00

2 SINGLE FAM 100% - 2009 Heated Area: 4542 HX Base Yr 2009

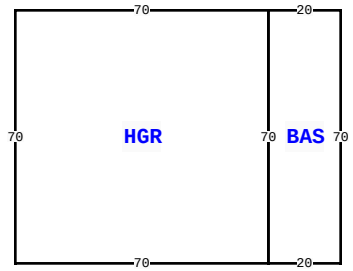

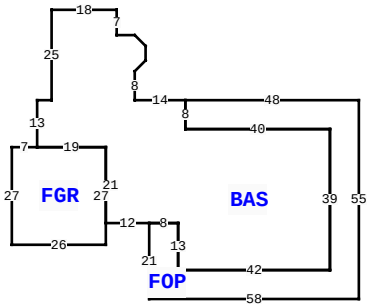

355 SW AVIATION DR, LAKE CITY

BLD DATE		LGL DATE	
XF DATE		LAND DATE	04/07/2025 MLU
INC DATE		AG DATE	

EXTRA FEATURES

LN	OB/XF CODE	DESCRIPTION	BLD	CAP	L	W	UNITS	UT	Adj R	ADJ UNIT PRICE	ORIG COND	YEAR ON	YEAR ACTUAL	Q	% COND	OB/XF MKT VALUE	NOTES
1	0166	CONC,PAVMT	0	100	50	56	2,550.00	UT	3.00	3.00	100	2007	2007	3	100	7,650	
2	0180	FPLC 1STRY	0	100	0	0	1.00	UT	2,000.00	2,000.00	100	2008	2008	3	100	2,000	
3	0166	CONC,PAVMT	0	100	0	0	7,817.00	UT	3.00	3.00	100	2008	2008	3	100	23,451	

COLUMBIA COUNTY PROPERTY

PAGE 1 of 1 3

VALUATION SUMMARY

VALUATION BY		STANDARD
Tax Group: 3	Tax Dist:	
BUILDING MARKET VALUE		932,812
TOTAL MARKET OB/XF VALUE		33,101
TOTAL LAND VALUE - MARKET		55,000
TOTAL MARKET VALUE		1,020,913
SOH/AGL Deduction		578,251
ASSESSED VALUE		442,662
TOTAL EXEMPTION VALUE	HX HB	51,411
BASE TAXABLE VALUE		391,251
TOTAL JUST VALUE		1,020,913
NCON VALUE		0
INCOME VALUE		
PREVIOUS YEAR MKT VALUE		1,015,620

SALE:4:1: LOT 12 LAKE CITY AIRPARK
SALE:3:1: LOT 12 LAKE CITY AIRPARK $.70 STAMPS
SALE:2:1: $.70 STAMPS
SALE:1:1: LOT 12 LAKE CITY AIRPARK

PERMIT NUM	DESCRIPTION	AMT	ISSUED
26178	SFR	910	08/28/2008
24538	PLANE HNGR	488	05/19/2006

SALES DATA

OFF RECORD Number	DATE	TYPE INST	Q U /	V I /	RSN CD	SALE PRICE
1039/1478	2/18/2005	WD	Q	V		77,000
GRANTOR: JEFFERY P & KAREN A R						
GRANTEE: WILLIAM C & JEAN D						
1020/0429	6/30/2004	WD	Q	V		50,000
GRANTOR: BEVERLY I GJOEN						
GRANTEE: JEFFREY P & KAREN A						

BUILDING NOTES

BUILDING DIMENSIONS

BAS= W18 S25 W4 S13 FGR= W7 S27 E26 N27 W19$ E19 S21 E12 FOP= S21 E58 N55 W48 S8 E40 S39 W42 N13 W8$ E8 S13 E42 N39 W40 N8 W14 N8 U3 R3 N4 L3 U3 W5 N7$ PTR= N30 BAS= N70 W20 HGR= W70 S70 E70 N70$ S70 E20$ S30$.

LAND DESCRIPTION

TOTAL OB/XF 33,101

LN	USE CODE	CLS	LAND USE DESCRIPTION	CAP	RD	LOC ZONE	FRONT	DEPTH	TOT LND UTS	UNIT TYPE	DT	DPTH FACT	% COND	TOT ADJ	UNIT PRICE	ADJ UNIT PRICE	LAND VALUE	OTHER ADJUSTMENTS AND NOTES	YEAR	DENSITY	DECL	FRZ	YR	CONSRV
1	0100	C	SFR	100		RSF-1	0.00	0.00	1.00	LT		1.00	1.00	1.00	55,000.00	55,000.00	55,000							

REVIEW DATE 08/17/2017 BY BC Total Acres: 4.01 Total Land Value: 55,000 Market: 0 Agricultural: 0 Common: 55,000 PRINTED 05/07/2026 BY SYS