S1/2 OF NE1/4 LYING E OF OMAR ER
SE1/4.

SMITH LAWRENCE E/SMITH JACQUEALENE
1017 NE OMAR TER
LAKE CITY, FL 32055

2026

21-1S-17-04554-000

BUILDING CHARACTERISTICS

ELEMENT	CD	CONSTRUCTION
Exterior Wall	10	ABOVE AVG. 100
Roof Structur	03	GABLE/HIP 100
Roof Cover	12	MODULAR MT 100
Interior Wall	05	DRYWALL 100
Interior Floo	12	HARDWOOD 80
Interior Floo	15	HARDTILE 20
Air Condition	03	CENTRAL 100
Heating Type	04	AIR DUCTED 100
Bedrooms		3 100
Bathrooms		3 100
Frame	02	WOOD FRAME 100
Stories	1.	1. 100
Units		0 100
Quality	06	06
DOR CODE	5000	IMPROVED AG
MAP NUM		MKT AREA 05
NEIGHBORHOOD/LOC	21117.00	1.00/

AREA TYPE	TOTAL GROSS AREA	PCT OF BASE	YEAR	TOT ADJ AREA	SUBAREA MARKET VALUE
BAS	1,784	100		1,784	222,952
FCP	576	25		144	17,996
FOP	472	30		142	17,746
FOP	880	30		264	32,993
FUS	932	100		932	116,474
TOTALS	4,644			3,266	408,162

MARKET ADJUSTMENTS

TYPE	MDL	EFF. AREA	TOT ADJ PTS	EFF. BASE RATE	REPL. COST NEW	AYB	EYB	ECON	FNCT		NORM	% COND
0100	01	3,266	118.7025	132.95	434,215	2019	2019	0	0	0	6.00	94.00

1 SINGLE FAM 100% - 2025 Heated Area: 2716 HX Base Yr 2025

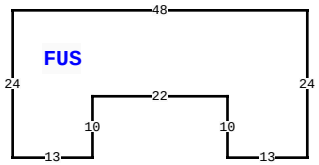

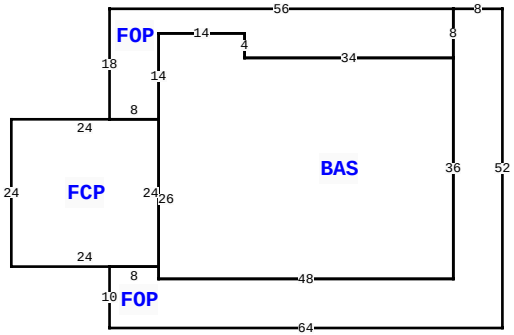

1017 NE OMAR TER, LAKE CITY

BLD DATE		LGL DATE	
XF DATE		LAND DATE	12/07/2022 MLU
INC DATE		AG DATE	

COLUMBIA COUNTY PROPERTY

PAGE 1 of 1 3

VALUATION SUMMARY

VALUATION BY		STANDARD
Tax Group: 3	Tax Dist:	
BUILDING MARKET VALUE		408,162
TOTAL MARKET OB/XF VALUE		10,300
TOTAL LAND VALUE - MARKET		246,430
TOTAL MARKET VALUE		472,416
SOH/AGL Deduction		0
ASSESSED VALUE		472,416
TOTAL EXEMPTION VALUE	HX HB WR	56,411
BASE TAXABLE VALUE		416,005
TOTAL JUST VALUE		664,892
NCON VALUE		0
INCOME VALUE		
PREVIOUS YEAR MKT VALUE		669,234

PERMIT NUM	DESCRIPTION	AMT	ISSUED
37256	SFR	1,629	09/26/2018
21299	TR/TRAILER	150	12/01/2003

SALES DATA

OFF RECORD Number	DATE	TYPE INST	Q U	V I	RSN CD	SALE PRICE
1351/2607	1/17/2018	WD	U	V	37	55,000
GRANTOR: ANDERSON COLUMBIA CO						
GRANTEE: LAWRENCE & JACQUALE						
0980/2468	2/25/2003	WD	Q	V		167,100
GRANTOR: SOUTHERN TIMBER VENTU						
GRANTEE: LAWRENCE & JACQUALE						

BUILDING NOTES

BUILDING DIMENSIONS

FOP= W56 S18 E8 N14 E14 S4 E34 N8$ FOP= S8 BAS= W34 N4 W14 S14 FCP= W24 S24 E24 N24$ S26 E48 N36$ S36 W48 N2 W8 S10 E64 N52W8$ PTR= N30 FUS= N24 W48 S24 E13 N10 E22 S10 E13$ S30$.

EXTRA FEATURES

LN	OB/XF CODE	DESCRIPTION	BLD	CAP	L	W	UNITS	UT	Adj R	ADJ UNIT PRICE	ORIG COND	YEAR ON	YEAR ACTUAL	Q	% COND	OB/XF MKT VALUE	NOTES
1	0040	BARN,POLE	0	100	0	0	1.00	UT	0.00	0.00	100	2011	2011	3	100	1,500	
2	0296	SHED METAL	0	100	0	0	1.00	UT	0.00	0.00	100	2011	2011	3	100	600	
3	0190	FPLC PF	0	100	0	0	1.00	UT	1,200.00	1,200.00	100	2019	2019	3	100	1,200	
4	9945	Well/Sept	0	100	0	0	1.00	UT	7,000.00	7,000.00	100			3	100	7,000	

LAND DESCRIPTION

TOTAL OB/XF 10,300

LN	USE CODE	CLS	LAND USE DESCRIPTION	CAP	RD	LOC ZONE	FRONT	DEPTH	TOT LND UTS	UNIT TYPE	DT	DPTH FACT	% COND	TOT ADJ	UNIT PRICE	ADJ UNIT PRICE	LAND VALUE	OTHER ADJUSTMENTS AND NOTES	YEAR	DENSITY	DECL	FRZ	YR	CONSRV
1	5500	A	TIMBER 2	0		A-1	0.00	0.00	116.30	AC		1.00	1.00	1.00	445.00	445.00	51,754							
2	9910	M	MKT.VAL.AG	0		A-1	0.00	0.00	116.30	AC		1.00	1.00	1.00	2,100.00	2,100.00	244,230							
3	0100	C	SFR	100			0.00	0.00	1.00	AC		1.00	1.00	1.00	2,200.00	2,200.00	2,200							

REVIEW DATE 12/30/2019 BY HC Total Acres: 117.30 Total Land Value: 53,954 Market: 244,230 Agricultural: 51,754 Common: 2,200 PRINTED 03/27/2026 BY SYS