LOT 28 OAKS OF LAKE CITY PHS 1

WD 1041-2290, WD 1294-338,

MORRISON JENNY SAUNDERS
P O BOX 3204
LAKE CITY, FL 32056

2026

18-5S-17-09280-128

COLUMBIA COUNTY PROPERTY

BUILDING CHARACTERISTICS

ELEMENT	CD	CONSTRUCTION
Exterior Wall	19	COMMON BRK 100
Roof Structur	08	IRREGULAR 100
Roof Cover	03	COMP SHNGL 100
Interior Wall	05	DRYWALL 100
Interior Floo	14	CARPET 80
Interior Floo	15	HARDTILE 20
Air Condition	03	CENTRAL 100
Heating Type	04	AIR DUCTED 100
Bedrooms		3 100
Bathrooms		2 100
Frame	02	WOOD FRAME 100
Stories	1.	1. 100
Architectual	05	CONV 100
Units		0 100
Quality	07	07

DOR CODE 0100 SINGLE FAMILY

MAP NUM | MKT AREA 02

NEIGHBORHOOD/LOC 18517.010 1.00/

AREA TYPE	TOTAL GROSS AREA	PCT OF BASE	YEAR	TOT ADJ AREA	SUBAREA MARKET VALUE
BAS	1,488	100		1,488	190,736
FGR	876	55		482	61,784
FOP	24	30		7	897
FOP	48	30		14	1,795
FUS	862	100		862	110,493
TOTALS	3,298			2,853	365,705

MARKET ADJUSTMENTS

TYPE	MDL	EFF. AREA	TOT ADJ PTS	EFF. BASE RATE	REPL. COST NEW	AYB	EYB	ECON	FNCT		NORM	% COND
0100	01	2,853	123.5586	140.86	401,874	2016	2016	0	0	0	9.00	91.00

1 SINGLE FAM 100% - 2017 Heated Area: 2350 HX Base Yr 2017

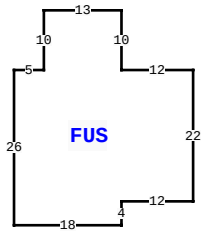

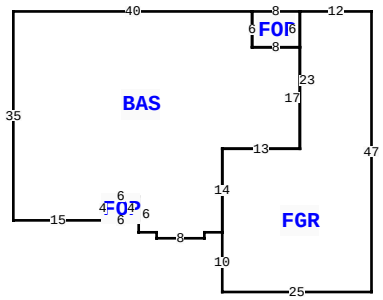

847 SW MANDIBA DR, LAKE CITY

BLD DATE		LGL DATE	
XF DATE		LAND DATE	05/14/2024 MLU
INC DATE		AG DATE	

VALUATION SUMMARY

VALUATION BY		STANDARD
Tax Group: 3	Tax Dist:	
BUILDING MARKET VALUE		365,705
TOTAL MARKET OB/XF VALUE		6,946
TOTAL LAND VALUE - MARKET		55,000
TOTAL MARKET VALUE		427,651
SOH/AGL Deduction		159,959
ASSESSED VALUE		267,692
TOTAL EXEMPTION VALUE	HX HB	51,411
BASE TAXABLE VALUE		216,281
TOTAL JUST VALUE		427,651
NCON VALUE		0
INCOME VALUE		
PREVIOUS YEAR MKT VALUE		425,187

PERMIT NUM	DESCRIPTION	AMT	ISSUED
33634	SFR	931	12/17/2015

SALES DATA

OFF RECORD Number	DATE	TYPE INST	Q U	V I	RSN CD	SALE PRICE
1294/0338	5/05/2015	WD	Q	V	01	24,000

GRANTOR: OAKS OF LAKE CITY LLC

GRANTEE: JENNY SAUNDERS MORR

BUILDING NOTES

BUILDING DIMENSIONS

BAS= W40 S35 E15 FOP= E6 N4 W6 S4$ N4 E6 S6 E3 S1 E8 N1 E3 FGR= S10 E25 N47 W12 S23 W13 S14$ N14 E13 N17 FOP= N6 W8 S6 E8$ W8 N6$ PTR= N30 FUS= N22 W12 N10 W13 S10 W5 S26 E18 N4 E12$ S30$.

EXTRA FEATURES

LN	OB/XF CODE	DESCRIPTION	BLD	CAP	L	W	UNITS	UT	Adj R	ADJ UNIT PRICE	ORIG COND	YEAR ON	YEAR ACTUAL	Q	% COND	OB/XF MKT VALUE	NOTES
1	0190	FPLC PF	0	100	0	0	1.00	UT	1,200.00	1,200.00	100	2016	2016	3	100	1,200	
2	0166	CONC,PAVMT	0	100	0	0	2,873.00	UT	2.00	2.00	100	2016	2016	3	100	5,746	

LAND DESCRIPTION

TOTAL OB/XF 6,946

LN	USE CODE	CLS	LAND USE DESCRIPTION	CAP	RD	LOC ZONE	FRONT	DEPTH	TOT LND UTS	UNIT TYPE	DT	DPTH FACT	% COND	TOT ADJ	UNIT PRICE	ADJ UNIT PRICE	LAND VALUE	OTHER ADJUSTMENTS AND NOTES	YEAR	DENSITY	DECL	FRZ	YR	CONSRV
1	0100	C	SFR	100		PRD	0.00	0.00	1.00	LT		1.00	1.00	1.00	55,000.00	55,000.00	55,000							

REVIEW DATE 08/30/2017 BY BC Total Acres: 1.01 Total Land Value: 55,000 Market: 0 Agricultural: 0 Common: 55,000 PRINTED 05/08/2026 BY SYS