LOT 17 BLACKBERRY FARMS S/D.

ORB WD 999-372. WD 1204-473, WD

FLUGRATH GERALDINE
1139 NW BLACKBERRY CIR
LAKE CITY, FL 32055

2026

17-3S-16-02168-117

COLUMBIA COUNTY PROPERTY

BUILDING CHARACTERISTICS

ELEMENT	CD	CONSTRUCTION
Exterior Wall	19	COMMON BRK 100
Roof Structur	08	IRREGULAR 100
Roof Cover	12	MODULAR MT 100
Interior Wall	05	DRYWALL 100
Interior Floo	12	HARDWOOD 80
Interior Floo	15	HARDTILE 20
Air Condition	03	CENTRAL 100
Heating Type	04	AIR DUCTED 100
Bedrooms		4 100
Bathrooms		3.5 100
Frame	02	WOOD FRAME 100
Stories	2.	2. 100
Architectual	05	CONV 100
Units		0 100
Condition Adj	03	03 100
Kitchen Adjus	01	01 100
Quality	07	07
DOR CODE	0100	SINGLE FAMILY
MAP NUM		MKT AREA 01
NEIGHBORHOOD/LOC	17316.00	1.00/

AREA TYPE	TOTAL GROSS AREA	PCT OF BASE	YEAR	TOT ADJ AREA	SUBAREA MARKET VALUE
BAS	2,327	100		2,327	300,920
FGR	944	55		519	67,115
FOP	264	30		79	10,216
FOP	297	30		89	11,509
FUS	992	100		992	128,282
UOP	693	20		139	17,975
TOTALS	5,517			4,145	536,017

MARKET ADJUSTMENTS

TYPE	MDL	EFF. AREA	TOT ADJ PTS	EFF. BASE RATE	REPL. COST NEW	AYB	EYB	ECON	FNCT		NORM	% COND
0100	01	4,145	140.0438	159.65	661,749	2006	2006	0	0	0	19.00	81.00

1 SINGLE FAM 100% - 2015 Heated Area: 3319 HX Base Yr 2015

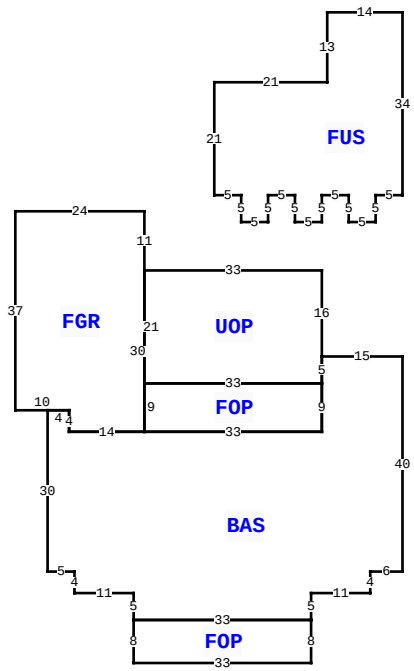

1139 NW BLACKBERRY CIR, LAKE CITY

BLD DATE		LGL DATE	
XF DATE		LAND DATE	04/22/2026 MLU
INC DATE		AG DATE	

VALUATION SUMMARY

VALUATION BY		STANDARD
Tax Group: 3	Tax Dist:	
BUILDING MARKET VALUE		536,017
TOTAL MARKET OB/XF VALUE		57,156
TOTAL LAND VALUE - MARKET		64,320
TOTAL MARKET VALUE		657,493
SOH/AGL Deduction		296,766
ASSESSED VALUE		360,727
TOTAL EXEMPTION VALUE	HX HB	51,411
BASE TAXABLE VALUE		309,316
TOTAL JUST VALUE		657,493
NCON VALUE		0
INCOME VALUE		
PREVIOUS YEAR MKT VALUE		651,283

PERMIT NUM	DESCRIPTION	AMT	ISSUED
000049207	Roof Replacement	37,855	02/13/2024
28977	POOL	205	11/03/2010
23130	SFR	916	05/11/2005

SALES DATA

OFF RECORD Number	DATE	TYPE INST	Q U	V I	RSN CD	SALE PRICE
1275/2142	6/05/2014	WD	Q	I	01	390,000
GRANTOR: ERIC G III & TINA R E						
GRANTEE: GERALDINE FLUGRATH						
1204/0473	10/29/2010	WD	Q	I	03	325,000
GRANTOR: ROBERT R & MARGARET L						
GRANTEE: ERIC G ERICKSON 111						

BUILDING NOTES

BUILDING DIMENSIONS

BAS= W15 UOP= N16 W33 FGR= N11 W24 S37 E10 S4 E14 N30$ S21 E33 N5$ S5 FOP= W33 S9 E33 N9$ S9 W33 W14 N4 W4 S30 E5 S4 E11 S5 FOP= S8 E33 N8 W33$ E33 N5 E11 N4 E6 N40$ PTR= N30 FUS= N34 W14 S13 W21 S21 E5 S5 E5 N5 E5 S5 E5 N5 E5 S5 E5 N5 E5 $ S30$.

EXTRA FEATURES

LN	OB/XF CODE	DESCRIPTION	BLD	CAP	L	W	UNITS	UT	Adj R	ADJ UNIT PRICE	ORIG COND	YEAR ON	YEAR ACTUAL	Q	% COND	OB/XF MKT VALUE	NOTES
1	0180	FPLC 1STRY	0	100	0	0	1.00	UT	2,000.00	2,000.00	100	2006	2006	3	100	2,000	
2	0166	CONC,PAVMT	0	100	7	12	84.00	UT	2.50	2.50	100	2006	2006	3	100	210	
3	0260	PAVEMENT-A	0	100	0	0	6,492.00	UT	1.50	1.50	100	2006	2006	3	100	9,738	
4	0280	POOL R/CON	0	100	0	0	976.00	UT	70.00	70.00	100	2010	2010	3	65	44,408	
5	0169	FENCE/WOOD	0	100	0	0	1.00	UT	800.00	800.00	100	2023	2022		100	800	

LAND DESCRIPTION

TOTAL OB/XF 57,156

LN	USE CODE	CLS	LAND USE DESCRIPTION	CAP	RD	LOC ZONE	FRONT	DEPTH	TOT LND UTS	UNIT TYPE	DT	DPTH FACT	% COND	TOT ADJ	UNIT PRICE	ADJ UNIT PRICE	LAND VALUE	OTHER ADJUSTMENTS AND NOTES	YEAR	DENSITY	DECL	FRZ	YR	CONSRV
1	0100	C	SFR	100		A-1	0.00	0.00	5.36	AC		1.00	1.00	1.00	12,000.00	12,000.00	64,320							

REVIEW DATE 03/04/2024 BY JS Total Acres: 5.36 Total Land Value: 64,320 Market: 0 Agricultural: 0 Common: 64,320 PRINTED 05/12/2026 BY SYS