COMM NW COR OF SE1/4 OF SE1/4, R
FOR POB, RUN S 65 DG E 351.42 FT
LINE SR-247, SW ALONG R/W 470.58

ASBURY DREAMA P
4310 SW STATE ROAD 247
LAKE CITY, FL 32024

2026

16-4S-16-03046-000

COLUMBIA COUNTY PROPERTY

BUILDING CHARACTERISTICS

ELEMENT	CD	CONSTRUCTION
Exterior Wall	19	COMMON BRK 100
Roof Structur	03	GABLE/HIP 100
Roof Cover	03	COMP SHNGL 100
Interior Wall	05	DRYWALL 100
Interior Floo	14	CARPET 90
Interior Floo	06	VINYL ASB 10
Air Condition	03	CENTRAL 100
Heating Type	04	AIR DUCTED 100
Bedrooms		4 100
Bathrooms		3 100
Frame	01	NONE 100
Stories	1.	1. 100
Architectual	05	CONV 100
Units		0 100
Condition Adj	03	03 100
Kitchen Adjus	01	01 100
Quality	05	05
DOR CODE	0100	SINGLE FAMILY
MAP NUM		MKT AREA 06
NEIGHBORHOOD/LOC	16416.010	1.00/

AREA TYPE	TOTAL GROSS AREA	PCT OF BASE	YEAR	TOT ADJ AREA	SUBAREA MARKET VALUE
BAS	2,462	100		2,462	198,437
FCP	400	25		100	8,060
FGR	625	55		344	27,726
FST	144	55		79	6,367
UOP	70	20		14	1,128
UOP	88	20		18	1,451
UOP	98	20		20	1,612
TOTALS	3,887			3,037	244,782

MARKET ADJUSTMENTS

TYPE	MDL	EFF. AREA	TOT ADJ PTS	EFF. BASE RATE	REPL. COST NEW	AYB	EYB	ECON	FNCT		NORM	% COND
0100	01	3,037	108.7750	124.00	376,588	1987	1987	0	0	0	35.00	65.00

1 SINGLE FAM 100% - 2016 Heated Area: 2462 HX Base Yr 2016

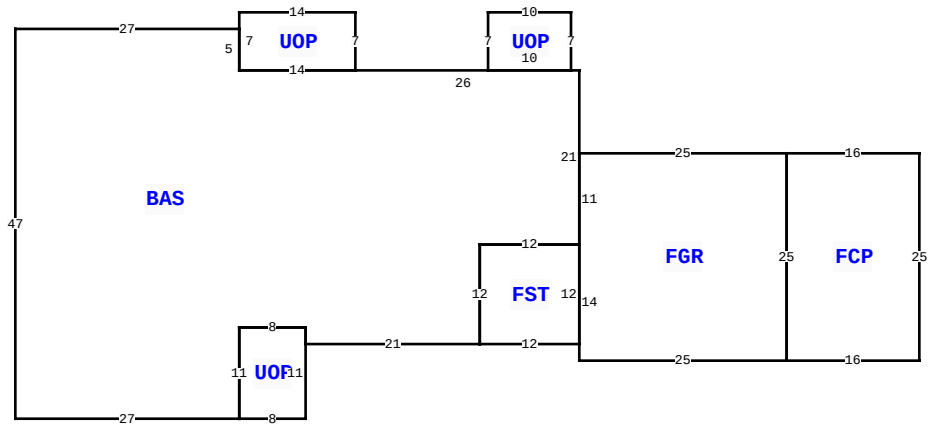

4310 SW STATE ROAD 247 , LAKE CITY

BLD DATE		LGL DATE	
XF DATE		LAND DATE	
INC DATE		AG DATE	

VALUATION SUMMARY

VALUATION BY		STANDARD
Tax Group: 3	Tax Dist:	
BUILDING MARKET VALUE		244,782
TOTAL MARKET OB/XF VALUE		4,812
TOTAL LAND VALUE - MARKET		20,125
TOTAL MARKET VALUE		269,719
SOH/AGL Deduction		91,217
ASSESSED VALUE		178,502
TOTAL EXEMPTION VALUE	WX HX HB SX	106,411
BASE TAXABLE VALUE		72,091
TOTAL JUST VALUE		269,719
NCON VALUE		0
INCOME VALUE		
PREVIOUS YEAR MKT VALUE		265,436

PERMIT NUM	DESCRIPTION	AMT	ISSUED

SALES DATA

OFF RECORD Number	DATE	TYPE INST	Q U /	V I /	RSN CD	SALE PRICE
1543/2157	6/03/2025	LE	U	I	14	100
GRANTOR: ASBURY DREAMA P (ENH						
GRANTEE: SAKOWICZ MELINDA JE						
1543/2152	6/03/2025	TR	U	I	11	100
GRANTOR: ASBURY DONALD J & DRE						
GRANTEE: ASBURY DREAMA P						

BUILDING NOTES

BUILDING DIMENSIONS

BAS= W27 S47 E27 UOP= E8 N11W8 S11$ N11 E8 S2 E21 FST= E12 N12 W12 S12$ N12 E12 FGR= S14 E25 FCP= E16 N25 W16 S25$ N25 W25 S11$ N21W1 UOP= N7 W10 S7 E10$ W26 UOP= N7 W14 S7 E14$ W14 N5$.

EXTRA FEATURES

LN	OB/XF CODE	DESCRIPTION	BLD	CAP	L	W	UNITS	UT	Adj R	ADJ UNIT PRICE	ORIG COND	YEAR ON	YEAR ACTUAL	Q	% COND	OB/XF MKT VALUE	NOTES
1	0190	FPLC PF	0	100	0	0	2.00	UT	1,200.00	1,200.00	100	0	0	3	100	2,400	
2	0166	CONC,PAVMT	0	100	24	20	1.00	UT	0.00	0.00	100	0	0	3	100	320	
3	0296	SHED METAL	0	100	16	40	1.00	UT	0.00	0.00	100	0	0	3	100	350	
4	0261	PRCH, UOP	0	100	12	12	144.00	UT	6.50	6.50	75	1993	1993	3	75	702	
5	0252	LEAN-TO W/	0	100	10	16	160.00	UT	2.00	2.00	75	1993	1993	3	75	240	
6	0120	CLFENCE 4	0	100	0	0	1.00	UT	0.00	0.00	100	1993	1993	3	100	800	

LAND DESCRIPTION

TOTAL OB/XF 4,812

LN	USE CODE	CLS	LAND USE DESCRIPTION	CAP	RD	LOC ZONE	FRONT	DEPTH	TOT LND UTS	UNIT TYPE	DT	DPTH FACT	% COND	TOT ADJ	UNIT PRICE	ADJ UNIT PRICE	LAND VALUE	OTHER ADJUSTMENTS AND NOTES	YEAR	DENSITY	DECL	FRZ	YR	CONSRV
1	0100	C	SFR	100		00	0.00	0.00	1.75	AC		1.00	1.00	1.00	11,500.00	11,500.00	20,125							

REVIEW DATE 07/15/2024 BY KS Total Acres: 1.75 Total Land Value: 20,125 Market: 0 Agricultural: 0 Common: 20,125 PRINTED 05/12/2026 BY SYS