E1/2 OF SW1/4 OF NE1/4 & COMM NW
OF NE 1/4, E 49.19 FT TO POB, E
856.65 FT, W 494 FT TO PT OF CUR

NOLL ROGER K/NOLL EMMA L
116 SW BARNACLE PL
LAKE CITY, FL 32024

2026

15-4S-16-02988-002

COLUMBIA COUNTY PROPERTY

BUILDING CHARACTERISTICS

ELEMENT	CD	CONSTRUCTION
Exterior Wall	19	COMMON BRK 90
Exterior Wall	31	VINYL SID 10
Roof Structur	08	IRREGULAR 100
Roof Cover	03	COMP SHNGL 100
Interior Wall	05	DRYWALL 100
Interior Floo	14	CARPET 90
Interior Floo	11	CLAY TILE 10
Air Condition	03	CENTRAL 100
Heating Type	04	AIR DUCTED 100
Bedrooms		3 100
Bathrooms		2 100
Frame	01	NONE 100
Stories	2.	2. 100
Architectual	05	CONV 100
Units		0 100
Condition Adj	03	03 100
Kitchen Adjus	01	01 100
Quality	05	05
DOR CODE	5000	IMPROVED AG
MAP NUM		MKT AREA 06
NEIGHBORHOOD/LOC	15416.00	1.00/

AREA TYPE	TOTAL GROSS AREA	PCT OF BASE	YEAR	TOT ADJ AREA	SUBAREA MARKET VALUE
BAS	1,954	100		1,954	177,621
FGR	441	55		243	22,089
FOP	102	30		31	2,818
FOP	246	30		74	6,727
FUS	906	100		906	82,356
TOTALS	3,649			3,208	291,611

MARKET ADJUSTMENTS

TYPE	MDL	EFF. AREA	TOT ADJ PTS	EFF. BASE RATE	REPL. COST NEW	AYB	EYB	ECON	FNCT		NORM	% COND
0100	01	3,208	115.4979	129.36	414,987	1996	1996	0	0	0	29.73	70.27

1 SINGLE FAM 100% - 1997 Heated Area: 2860 HX Base Yr 1997

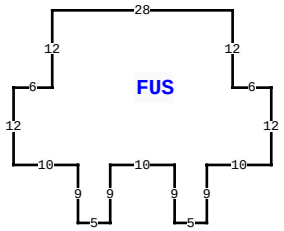

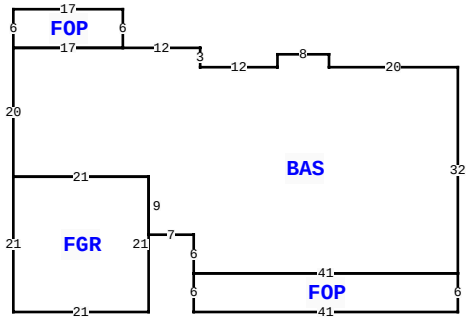

116 SW BARNACLE PL, LAKE CITY

BLD DATE		LGL DATE	
XF DATE		LAND DATE	04/10/2025 MLU
INC DATE		AG DATE	05/08/2023 CM

VALUATION SUMMARY

VALUATION BY		STANDARD
Tax Group: 3	Tax Dist:	
BUILDING MARKET VALUE		291,611
TOTAL MARKET OB/XF VALUE		17,784
TOTAL LAND VALUE - MARKET		146,150
TOTAL MARKET VALUE		324,523
SOH/AGL Deduction		122,122
ASSESSED VALUE		202,401
TOTAL EXEMPTION VALUE	HX HB	51,411
BASE TAXABLE VALUE		150,990
TOTAL JUST VALUE		455,545
NCON VALUE		0
INCOME VALUE		
PREVIOUS YEAR MKT VALUE		459,820

PERMIT NUM	DESCRIPTION	AMT	ISSUED
000047352	Electrical Servic	0	06/01/2023
000047172	Roof Replacement	10,000	05/09/2023
32223	MAINT/ALTR	50	08/19/2014
7816	SFR	85,000	11/23/1993

SALES DATA

OFF RECORD Number	DATE	TYPE INST	Q U	V I	RSN CD	SALE PRICE
1528/865	10/22/2024	LE	U	I	14	100
GRANTOR: NOLL ROGER K (ENH LE)						
GRANTEE: NOLL KEVIN A (RMDR'						
1480/196	11/18/2022	WD	Q	I	01	45,000
GRANTOR: PETTY MARIE H						
GRANTEE: NOLL ROGER K						

BUILDING NOTES

BUILDING DIMENSIONS

BAS= W20 N2 W8 S2 W12 N3 W12 FOP= N6 W17 S6 E17$ W17 S20 FGR= S21 E21 N21 W21$ E21 S9 E7 S6 FOP= S6 E41 N6 W41$ E41N32$ PTR= N30 FUS= N9 E10 N12 W6 N12 W28 S12 W6 S12 E10 S9 E5 N9 E10 S9 E5 $ S30$.

EXTRA FEATURES

LN	OB/XF CODE	DESCRIPTION	BLD	CAP	L	W	UNITS	UT	Adj R	ADJ UNIT PRICE	ORIG COND	YEAR ON	YEAR ACTUAL	Q	% COND	OB/XF MKT VALUE	NOTES
1	0166	CONC,PAVMT	0	100	16	20	320.00	UT	1.50	1.50	100	1996	1996	3	100	480	
2	0040	BARN,POLE	0	100	10	14	140.00	UT	3.50	3.50	99.7	1993	1993	3	99.7	489	
3	0210	GARAGE U	0	100	28	36	1,008.00	UT	18.00	18.00	80	1993	1993	3	80	14,515	
4	0169	FENCE/WOOD	0	100	0	0	1.00	UT	0.00	0.00	100	2007	2007	3	100	200	
5	0294	SHED WOOD/	0	100	0	0	1.00	UT	0.00	0.00	100	0	0	3	100	100	
6	0070	CARPORT UF	0	100	0	0	1.00	UT	0.00	0.00	100	2019	2019	3	100	2,000	

LAND DESCRIPTION

TOTAL OB/XF 17,784

LN	USE CODE	CLS	LAND USE DESCRIPTION	CAP	RD	LOC ZONE	FRONT	DEPTH	TOT LND UTS	UNIT TYPE	DT	DPTH FACT	% COND	TOT ADJ	UNIT PRICE	ADJ UNIT PRICE	LAND VALUE	OTHER ADJUSTMENTS AND NOTES	YEAR	DENSITY	DECL	FRZ	YR	CONSRV
1	0100	C	SFR	100		00	0.00	0.00	1.00	AC		1.00	1.00	1.00	5,000.00	5,000.00	5,000							
2	6200	A	PASTURE 3	0		00	0.00	0.00	12.00	AC		1.00	1.00	1.00	280.00	280.00	3,360							
3	5500	A	TIMBER 2	100					15.21	AC		1.00	1.00	1.00	445.00	445.00	6,768							
4	9910	M	MKT.VAL.AG	100					28.23	AC		1.00	1.00	1.00	5,000.00	5,000.00	141,150							

REVIEW DATE 08/21/2024 BY KS Total Acres: 28.21 Total Land Value: 15,128 Market: 141,150 Agricultural: 10,128 Common: 5,000 PRINTED 03/26/2026 BY SYS