LOT 19 BARWICK S/D.

ORB 432-399, 635-180, DEED TO TR

CHESIRE TIMMIE D
248 SW LEONARD TER
LAKE CITY, FL 32024

2026

08-4S-16-02815-020

COLUMBIA COUNTY PROPERTY

BUILDING CHARACTERISTICS

ELEMENT	CD	CONSTRUCTION
Exterior Wall	26	ALM SIDING 100
Roof Structur	03	GABLE/HIP 100
Roof Cover	12	MODULAR MT 100
Interior Wall	05	DRYWALL 100
Interior Floo	14	CARPET 90
Interior Floo	08	SHT VINYL 10
Air Condition	03	CENTRAL 100
Heating Type	04	AIR DUCTED 100
Bedrooms		3 100
Bathrooms		2 100
Stories	1.	1. 100
Architectual	01	CONV 100
Units		0 100
Condition Adj	03	03 100
Kitchen Adjus	01	01 100
Quality	05	05
DOR CODE	0200	MOBILE HOME
MAP NUM		MKT AREA 01
NEIGHBORHOOD/LOC	7416.0100	1.00/

MARKET ADJUSTMENTS

TYPE	MDL	EFF. AREA	TOT ADJ PTS	EFF. BASE RATE	REPL. COST NEW	AYB	EYB	ECON	FNCT		NORM	% COND
0800	02	2,552	118.9000	74.91	191,170	1988	1988	0	0	0	60.00	40.00

1 MOBILE HME 100% - 2020 Heated Area: 1512 HX Base Yr 2020

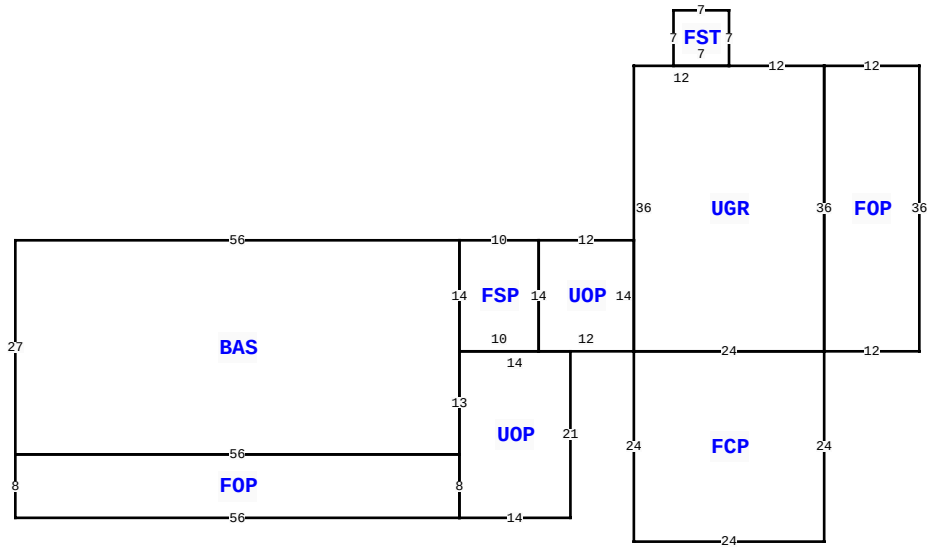

AREA TYPE	TOTAL GROSS AREA	PCT OF BASE	YEAR	TOT ADJ AREA	SUBAREA MARKET VALUE
BAS	1,512	100		1,512	45,306
FCP	576	25		144	4,315
FOP	432	35		151	4,524
FOP	448	35		157	4,704
FSP	140	40		56	1,678
FST	49	55		27	809
UGR	864	45		389	11,656
UOP	168	25		42	1,258
UOP	294	25		74	2,217
TOTALS	4,483			2,552	76,468

248 SW LEONARD TER, LAKE CITY

BLD DATE		LGL DATE	
XF DATE		LAND DATE	04/21/2026 MLU
INC DATE		AG DATE	

VALUATION SUMMARY

VALUATION BY		STANDARD
Tax Group: 3	Tax Dist:	
BUILDING MARKET VALUE		76,468
TOTAL MARKET OB/XF VALUE		12,424
TOTAL LAND VALUE - MARKET		46,240
TOTAL MARKET VALUE		135,132
SOH/AGL Deduction		64,885
ASSESSED VALUE		70,247
TOTAL EXEMPTION VALUE	HX HB	45,247
BASE TAXABLE VALUE		25,000
TOTAL JUST VALUE		135,132
NCON VALUE		0
INCOME VALUE		
PREVIOUS YEAR MKT VALUE		128,598

PERMIT NUM	DESCRIPTION	AMT	ISSUED

SALES DATA

OFF RECORD Number	DATE	TYPE INST	Q / U	V / I	RSN CD	SALE PRICE
1205/0924	11/16/2010	WD	Q	I	01	80,000
GRANTOR: EDWARD JONES COMPANY						
GRANTEE: TIMMIE D CHESIRE						
0635/0180	10/16/1987	WD	U	I		16,500
GRANTOR: ALLBRITTON JESSE J						
GRANTEE: LEWIS R J JR &						

BUILDING NOTES

BUILDING DIMENSIONS

BAS= W56 S27 FOP= S8 E56 N8 W56$ E56 UOP= S8 E14 N21 W14 S13$ N13 FSP= E10 UOP= E12 FCP= S24 E24 N24 W24$ UGR= E24 FOP= E12 N36 W12 S36$ N36 W12 FST= N7 W7 S7 E7$ W12 S36$ N14 W12 S14$ N14 W10 S14$ N14$.

EXTRA FEATURES

LN	OB/XF CODE	DESCRIPTION	BLD	CAP	L	W	UNITS	UT	Adj R	ADJ UNIT PRICE	ORIG COND	YEAR ON	YEAR ACTUAL	Q	% COND	OB/XF MKT VALUE	NOTES
1	0166	CONC,PAVMT	0	100	0	0	1.00	UT	0.00	0.00	100	1994	1994	3	100	800	
2	0070	CARPORT UF	0	100	24	34	816.00	UT	1.50	1.50	100	1993	1993	3	100	1,224	
3	9945	Well/Sept	0	100	0	0	1.00	UT	7,000.00	7,000.00	100			3	100	7,000	
4	0190	FPLC PF	0	100	0	0	1.00	UT	1,200.00	1,200.00	100	2006	2006	3	100	1,200	
5	0120	CLFENCE 4	0	100	0	0	1.00	UT	0.00	0.00	100	2006	2006	3	100	400	
6	0252	LEAN-TO W/	0	100	0	0	1.00	UT	0.00	0.00	100	2014	2014	3	100	100	
7	0252	LEAN-TO W/	0	100	0	0	1.00	UT	0.00	0.00	100	2014	2014	3	100	200	
8	0169	FENCE/WOOD	0	100	0	0	1.00	UT	0.00	0.00	100	2019	2019	3	100	1,500	

LAND DESCRIPTION

TOTAL OB/XF 12,424

LN	USE CODE	CLS	LAND USE DESCRIPTION	CAP	RD	LOC ZONE	FRONT	DEPTH	TOT LND UTS	UNIT TYPE	DT	DPTH FACT	% COND	TOT ADJ	UNIT PRICE	ADJ UNIT PRICE	LAND VALUE	OTHER ADJUSTMENTS AND NOTES	YEAR	DENSITY	DECL	FRZ	YR	CONSRV
1	0200	C	MBL HM	100		A-1	0.00	0.00	2.89	AC		1.00	1.00	1.00	16,000.00	16,000.00	46,240							

REVIEW DATE 03/04/2024 BY JB Total Acres: 2.89 Total Land Value: 46,240 Market: 0 Agricultural: 0 Common: 46,240 PRINTED 05/12/2026 BY SYS