SW1/4 OF NW1/4 EX 5 AC DESC

ORB 875-2172.

BALLANCE JANET BLANTON
400 SW DEKLE RD
LAKE CITY, FL 32024

2026

07-4S-16-02806-031

COLUMBIA COUNTY PROPERTY

BUILDING CHARACTERISTICS

ELEMENT	CD	CONSTRUCTION
Exterior Wall	19	COMMON BRK 100
Roof Structur	03	GABLE/HIP 100
Roof Cover	14	PREFIN MT 100
Interior Wall	05	DRYWALL 100
Interior Floo	14	CARPET 90
Interior Floo	08	SHT VINYL 10
Air Condition	03	CENTRAL 100
Heating Type	04	AIR DUCTED 100
Bedrooms		3 100
Bathrooms		3 100
Frame	01	NONE 100
Stories	1.	1. 100
Architectual	05	CONV 100
Units		0 100
Condition Adj	03	03 100
Kitchen Adjus	01	01 100
Quality	05	05
DOR CODE	5000	IMPROVED AG
MAP NUM		MKT AREA 01
NEIGHBORHOOD/LOC	7416.00	1.00/

AREA TYPE	TOTAL GROSS AREA	PCT OF BASE	YEAR	TOT ADJ AREA	SUBAREA MARKET VALUE
BAS	196	100		196	17,121
BAS	2,388	100		2,388	208,600
FGR	529	55		291	25,420
FOP	108	30		32	2,795
FOP	140	30		42	3,669
UDU	400	55		220	19,218
TOTALS	3,761			3,169	276,823

MARKET ADJUSTMENTS

TYPE	MDL	EFF. AREA	TOT ADJ PTS	EFF. BASE RATE	REPL. COST NEW	AYB	EYB	ECON	FNCT		NORM	% COND
0100	01	3,169	117.8880	134.39	425,882	1975	1975	0	0	0	35.00	65.00

1 SINGLE FAM 100% - 2000 Heated Area: 2584 HX Base Yr 2000

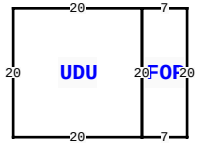

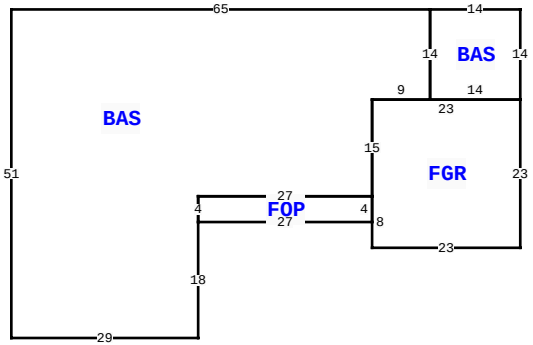

400 SW DEKLE RD, LAKE CITY

BLD DATE		LGL DATE	
XF DATE		LAND DATE	05/04/2026 MLU
INC DATE		AG DATE	

VALUATION SUMMARY

VALUATION BY		STANDARD
Tax Group: 3	Tax Dist:	
BUILDING MARKET VALUE		276,823
TOTAL MARKET OB/XF VALUE		32,900
TOTAL LAND VALUE - MARKET		210,000
TOTAL MARKET VALUE		330,853
SOH/AGL Deduction		145,376
ASSESSED VALUE		185,477
TOTAL EXEMPTION VALUE	HX HB	51,411
BASE TAXABLE VALUE		134,066
TOTAL JUST VALUE		519,723
NCON VALUE		0
INCOME VALUE		
PREVIOUS YEAR MKT VALUE		497,362

PERMIT NUM	DESCRIPTION	AMT	ISSUED

SALES DATA

OFF RECORD Number	DATE	TYPE INST	Q U /	V I /	RSN CD	SALE PRICE

BUILDING NOTES

BUILDING DIMENSIONS

BAS= W65 S51 E29 N18 FOP= E27 N4 W27 S4$ N4 E27 FGR= S8 E23 N23 W23 S15$ N15 E9 BAS= E14 N14 W14 S14 $ N14$ PTR= N30 FOP= N20 W7 UDU= W20 S20 E20 N20$ S20 E7$ S30$.

EXTRA FEATURES

LN	OB/XF CODE	DESCRIPTION	BLD	CAP	L	W	UNITS	UT	Adj R	ADJ UNIT PRICE	ORIG COND	YEAR ON	YEAR ACTUAL	Q	% COND	OB/XF MKT VALUE	NOTES
1	0190	FPLC PF	0	100	0	0	1.00	UT	1,200.00	1,200.00	100	1993	1993	3	100	1,200	
2	0166	CONC,PAVMT	0	100	0	0	1.00	UT	0.00	0.00	100	1993	1993	3	100	500	
3	0280	POOL R/CON	0	100	16	32	512.00	UT	70.00	70.00	30	1975	1975	3	30	10,752	
4	0020	BARN,FR	0	100	40	40	1,600.00	UT	2.00	2.00	70	0	0	3	70	2,240	
5	9945	Well/Sept	0	0	0	0	1.00	UT	7,000.00	7,000.00	100			3	100	7,000	
6	0294	SHED WOOD/	0	100	12	16	192.00	UT	9.00	9.00	100	2006	2006	3	100	1,728	
7	0252	LEAN-TO W/	0	100	10	40	400.00	UT	3.00	3.00	50	2006	2006	3	50	600	
8	0120	CLFENCE 4	0	100	0	0	80.00	UT	6.00	6.00	100	2006	2006	3	100	480	
9	0169	FENCE/WOOD	0	100	0	0	100.00	UT	10.00	10.00	100	2006	2006	3	100	1,000	
10	0252	LEAN-TO W/	0	100	10	40	400.00	UT	3.00	3.00	50	2006	2006	3	50	600	

LAND DESCRIPTION

TOTAL OB/XF 26,100

LN	USE CODE	CLS	LAND USE DESCRIPTION	CAP	RD	LOC ZONE	FRONT	DEPTH	TOT LND UTS	UNIT TYPE	DT	DPTH FACT	% COND	TOT ADJ	UNIT PRICE	ADJ UNIT PRICE	LAND VALUE	OTHER ADJUSTMENTS AND NOTES	YEAR	DENSITY	DECL	FRZ	YR	CONSRV
1	0100	C	SFR	100		A-1	0.00	0.00	1.00	AC		1.00	1.00	1.00	6,000.00	6,000.00	6,000							
2	5500	A	TIMBER 2	0			0.00	0.00	34.00	AC		1.00	1.00	1.00	445.00	445.00	15,130							
3	9910	M	MKT.VAL.AG	0			0.00	0.00	34.00	AC		1.00	1.00	1.00	6,000.00	6,000.00	204,000							

REVIEW DATE 02/13/2024 BY JB Total Acres: 35.00 Total Land Value: 21,130 Market: 204,000 Agricultural: 15,130 Common: 6,000 PRINTED 05/08/2026 BY SYS

SW1/4 OF NW1/4 EX 5 AC DESC

ORB 875-2172.

BALLANCE JANET BLANTON
400 SW DEKLE RD
LAKE CITY, FL 32024

2026

07-4S-16-02806-031

COLUMBIA COUNTY PROPERTY

BUILDING CHARACTERISTICS

ELEMENT	CD	CONSTRUCTION

DOR CODE	5000	IMPROVED AG	
MAP NUM		MKT AREA	01
NEIGHBORHOOD/LOC	7416.00	1.00/	

AREA TYPE	TOTAL GROSS AREA	PCT OF BASE	YEAR	TOT ADJ AREA	SUBAREA MARKET VALUE
TOTALS					

MARKET ADJUSTMENTS

TYPE	MDL	EFF. AREA	TOT ADJ PTS	EFF. BASE RATE	REPL. COST NEW	AYB	EYB	ECON	FNCT		NORM	% COND

VALUATION SUMMARY

VALUATION BY		STANDARD
Tax Group: 3	Tax Dist:	
BUILDING MARKET VALUE		276,823
TOTAL MARKET OB/XF VALUE		32,900
TOTAL LAND VALUE - MARKET		210,000
TOTAL MARKET VALUE		330,853
SOH/AGL Deduction		145,376
ASSESSED VALUE		185,477
TOTAL EXEMPTION VALUE	HX HB	51,411
BASE TAXABLE VALUE		134,066
TOTAL JUST VALUE		519,723
NCON VALUE		0
INCOME VALUE		
PREVIOUS YEAR MKT VALUE		497,362

PERMIT NUM	DESCRIPTION	AMT	ISSUED

SALES DATA

OFF RECORD Number	DATE	TYPE INST	Q U /	V I /	RSN CD	SALE PRICE

BLD DATE		LGL DATE	
XF DATE		LAND DATE	05/04/2026 MLU
INC DATE		AG DATE	

BUILDING NOTES

BUILDING DIMENSIONS

EXTRA FEATURES

LN	OB/XF CODE	DESCRIPTION	BLD	CAP	L	W	UNITS	UT	Adj R	ADJ UNIT PRICE	ORIG COND	YEAR ON	YEAR ACTUAL	Q	% COND	OB/XF MKT VALUE	NOTES
11	0060	CARPORT F	0	100	0	0	1.00	UT	0.00	0.00	100	2014	2014	3	100	3,800	
12	0296	SHED METAL	0	100	0	0	1.00	UT	0.00	0.00	100	2014	2014	3	100	900	
13	0294	SHED WOOD/	0	100	0	0	1.00	UT	0.00	0.00	100	2014	2014	3	100	600	
14	0040	BARN,POLE	0	100	0	0	1.00	UT	0.00	0.00	100	2019	2019	3	100	1,500	

LAND DESCRIPTION

TOTAL OB/XF 6,800

LN	USE CODE	CLS	LAND USE DESCRIPTION	CAP	RD	LOC ZONE	FRONT	DEPTH	TOT LND UTS	UNIT TYPE	DT	DPTH FACT	% COND	TOT ADJ	UNIT PRICE	ADJ UNIT PRICE	LAND VALUE	OTHER ADJUSTMENTS AND NOTES	YEAR	DENSITY	DECL	FRZ	YR	CONSRV

REVIEW DATE 02/13/2024 BY JB Total Acres: 35.00 Total Land Value: 21,130 Market: 204,000 Agricultural: 15,130 Common: 6,000 PRINTED 05/08/2026 BY SYS