LOT 37 BLOCK A WOODGATE VILLAGE

527-697, 550-369, 711-253, 763-1

KPONE LLC
4035 QUAIL CIR
VALDOSTA, GA 31601

2026

05-4S-16-02777-038

COLUMBIA COUNTY PROPERTY

BUILDING CHARACTERISTICS

ELEMENT	CD	CONSTRUCTION
Exterior Wall	05	AVERAGE 100
Roof Structur	03	GABLE/HIP 100
Roof Cover	12	MODULAR MT 100
Interior Wall	04	PLYWOOD 100
Interior Floo	14	CARPET 90
Interior Floo	08	SHT VINYL 10
Air Condition	03	CENTRAL 100
Heating Type	04	AIR DUCTED 100
Bedrooms		2 100
Bathrooms		2 100
Stories	1.	1. 100
Architectual	01	CONV 100
Units		0 100
Condition Adj	02	02 100
Kitchen Adjus	01	01 100
Quality	03	03

DOR CODE 0200 MOBILE HOME

MAP NUM | MKT AREA 06

NEIGHBORHOOD/LOC 5416.0100 1.00/

AREA TYPE	TOTAL GROSS AREA	PCT OF BASE	YEAR	TOT ADJ AREA	SUBAREA MARKET VALUE
BAS	924	100		924	20,280
FEP	60	85		51	1,119
UOP	120	25		30	658
TOTALS	1,104			1,005	22,058

MARKET ADJUSTMENTS

TYPE	MDL	EFF. AREA	TOT ADJ PTS	EFF. BASE RATE	REPL. COST NEW	AYB	EYB	ECON	FNCT		NORM	% COND
0800	02	1,005	91.4490	54.87	55,144	1982	1982	0	0	0	60.00	40.00

1 MOBILE HME 0% - 2026 Heated Area: 924 HX Base Yr

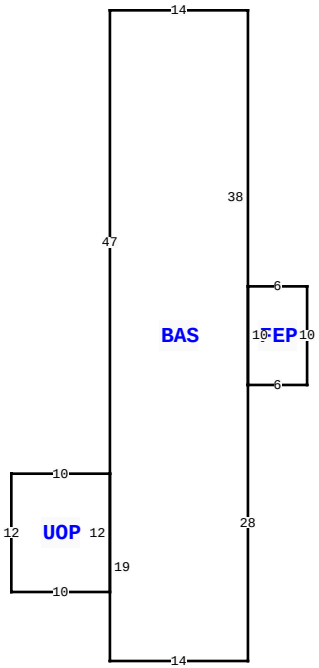

245 SW JUPITER GLN, LAKE CITY

BLD DATE		LGL DATE	
XF DATE		LAND DATE	04/21/2023 MLU
INC DATE		AG DATE	

VALUATION SUMMARY

VALUATION BY	STANDARD
Tax Group: 2	Tax Dist:
BUILDING MARKET VALUE	22,058
TOTAL MARKET OB/XF VALUE	4,000
TOTAL LAND VALUE - MARKET	18,500
TOTAL MARKET VALUE	44,558
SOH/AGL Deduction	0
ASSESSED VALUE	44,558
TOTAL EXEMPTION VALUE	0
BASE TAXABLE VALUE	44,558
TOTAL JUST VALUE	44,558
NCON VALUE	0
INCOME VALUE	
PREVIOUS YEAR MKT VALUE	47,010

XFOB:1:1: RIVER OAKS M H

PERMIT NUM	DESCRIPTION	AMT	ISSUED

SALES DATA

OFF RECORD Number	DATE	TYPE INST	Q / U	V / I	RSN CD	SALE PRICE
1548/94	8/15/2025	WD	U	I	37	30,000
GRANTOR: KOGER ROBERT J						
GRANTEE: KPONE LLC						
1325/2589	11/17/2016	QC	U	I	11	7,000
GRANTOR: TODD L & DEBRA E HUNT						
GRANTEE: ROBERT J KOGER						

BUILDING NOTES

BUILDING DIMENSIONS

BAS=[ORIG=0,0] W14 S47 S19 E14 N28 N38 $
UOP=[ORIG=-14,47] W10 S12 E10 N12 $
FEP=[ORIG=0,38] E6 N10 W6 S10 $
.

EXTRA FEATURES

LN	OB/XF CODE	DESCRIPTION	BLD	CAP	L	W	UNITS	UT	Adj R	ADJ UNIT PRICE	ORIG COND	YEAR ON	YEAR ACTUAL	Q	% COND	OB/XF MKT VALUE	NOTES
1	0130	CLFENCE 5	0	0	0	0	1.00	UT	0.00	0.00	100	2019	2019	3	100	1,000	
2	9947	Septic	0	0	0	0	1.00	UT	3,000.00	3,000.00	100			3	100	3,000	

LAND DESCRIPTION

TOTAL OB/XF 4,000

LN	USE CODE	CLS	LAND USE DESCRIPTION	CAP	RD	LOC ZONE	FRONT	DEPTH	TOT LND UTS	UNIT TYPE	DT	DPTH FACT	% COND	TOT ADJ	UNIT PRICE	ADJ UNIT PRICE	LAND VALUE	OTHER ADJUSTMENTS AND NOTES	YEAR	DENSITY	DECL	FRZ	YR	CONSRV
1	0200	C	MBL HM	0		RMH-2	75.00	145.00	1.00	LT		1.00	1.00	1.00	18,500.00	18,500.00	18,500							

REVIEW DATE 03/06/2026 BY TP Total Acres: 0.25 Total Land Value: 18,500 Market: 0 Agricultural: 0 Common: 18,500 PRINTED 03/25/2026 BY SYS