S DIV: LOTS 9 & 10 RE SURVEY BLO
S/D OF BLOCK 305 EX RD R/W.

JMD PROPERTY OF NORTH FLA LLC
295 NW COMMONS LOOP, #115, P0MB 220
LAKE CITY, FL 32055

2026

00-00-00-13808-000

BUILDING CHARACTERISTICS

ELEMENT	CD	CONSTRUCTION
Exterior Wall	03	BELOW AVG. 90
Exterior Wall	31	VINYL SID 10
Roof Structur	04	WOOD TRUSS 100
Roof Cover	03	COMP SHNGL 100
Interior Wall	05	DRYWALL 100
Interior Floo	09	PINE WOOD 100
Air Condition	03	CENTRAL 100
Heating Type	04	AIR DUCTED 100
Bedrooms		2 100
Bathrooms		1 100
Frame	02	WOOD FRAME 100
Stories	1.	1. 100
Architectual	05	CONV 100
Units		0 100
Condition Adj	01	01 100
Kitchen Adjus	01	01 100
Quality	03	03
DOR CODE	0100	SINGLE FAMILY
MAP NUM		MKT AREA 06
NEIGHBORHOOD/LOC	32317.060	1.00/

AREA TYPE	TOTAL GROSS AREA	PCT OF BASE	YEAR	TOT ADJ AREA	SUBAREA MARKET VALUE
BAS	440	100		440	12,674
BAS	1,414	100		1,414	40,730
FCP	150	25		38	1,094
FOP	24	30		7	202
FOP	210	30		63	1,815
FST	96	55		53	1,527
TOTALS	2,334			2,015	58,041

MARKET ADJUSTMENTS

TYPE	MDL	EFF. AREA	TOT ADJ PTS	EFF. BASE RATE	REPL. COST NEW	AYB	EYB	ECON	FNCT	AP	NORM	% COND
0100	01	2,015	56.1514	64.01	128,980	1925	1925	0	0	20	35.00	45.00

1 SINGLE FAM 0% - 0 Heated Area: 1854 HX Base Yr

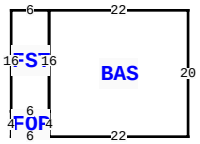

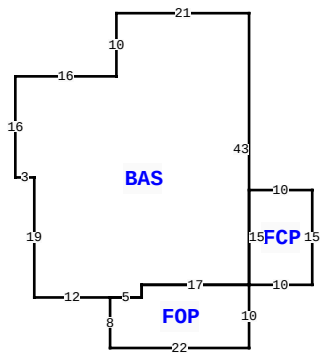

484 SE DIVISION AVE, LAKE CITY

BLD DATE		LGL DATE	
XF DATE		LAND DATE	
INC DATE		AG DATE	

COLUMBIA COUNTY PROPERTY

PAGE 1 of 1 1

VALUATION SUMMARY

VALUATION BY	STANDARD
Tax Group: 1	Tax Dist:
BUILDING MARKET VALUE	58,041
TOTAL MARKET OB/XF VALUE	500
TOTAL LAND VALUE - MARKET	24,000
TOTAL MARKET VALUE	82,541
SOH/AGL Deduction	0
ASSESSED VALUE	82,541
TOTAL EXEMPTION VALUE	0
BASE TAXABLE VALUE	82,541
TOTAL JUST VALUE	82,541
NCON VALUE	0
INCOME VALUE	
PREVIOUS YEAR MKT VALUE	81,525

LAND:1:1: DOR 1998

XFOB:1:1: DOR 1998

PERMIT NUM	DESCRIPTION	AMT	ISSUED

SALES DATA

OFF RECORD Number	DATE	TYPE INST	Q U	V I	RSN CD	SALE PRICE
1308/1243	1/14/2016	WD	U	I	12	41,500
GRANTOR:WELLS FARGO BANK NA						
GRANTEE:JMD PROPERTY OF NOR						
1298/0681	6/15/2015	CT	U	I	18	100
GRANTOR:CLERK OF COURTS						
GRANTEE:WELLS FARGO BANK NA						

BUILDING NOTES

BUILDING DIMENSIONS

BAS= W21 S10 W16 S16 E3 S19 E12FOP= S8 E22 N10 W17 S2 W5$E5 N2 E17 FCP= E10 N15 W10 S15$ N43$ PTR=N30 BAS= N20 W22 FST= W6 S16 E6 N16$ S16 FOP= W6 S4 E6 N4$ S4 E22$ S30$.

EXTRA FEATURES

LN	OB/XF CODE	DESCRIPTION	BLD	CAP	L	W	UNITS	UT	Adj R	ADJ UNIT PRICE	ORIG COND	YEAR ON	YEAR ACTUAL	Q	% COND	OB/XF MKT VALUE	NOTES
1	0166	CONC,PAVMT	0	0	0	0	1.00	UT	0.00	0.00	100	0	0	3	100	500	

LAND DESCRIPTION

TOTAL OB/XF 500

LN	USE CODE	CLS	LAND USE DESCRIPTION	CAP	RD	LOC ZONE	FRONT	DEPTH	TOT LND UTS	UNIT TYPE	DT	DPTH FACT	% COND	TOT ADJ	UNIT PRICE	ADJ UNIT PRICE	LAND VALUE	OTHER ADJUSTMENTS AND NOTES	YEAR	DENSITY	DECL	FRZ	YR	CONSRV
1	0100	C	SFR	0		*RO	80.00	100.00	8,000.00	SF		1.00	1.00	0.80	3.75	3.00	24,000							

REVIEW DATE 10/27/2016 BY DF Total Acres: 0.18 Total Land Value: 24,000 Market: 0 Agricultural: 0 Common: 24,000 PRINTED 05/08/2026 BY SYS