S DIV LOT 4 BLOCK C CHALKERS S/
593-205, 789-1139, QC 1131-1193

SANCHEZ LORI
464 SW HOPE MEADOWS CT
LAKE CITY, FL 32024

2026

00-00-00-13792-000

COLUMBIA COUNTY PROPERTY

BUILDING CHARACTERISTICS

ELEMENT	CD	CONSTRUCTION
Exterior Wall	04	SINGLE SID 100
Roof Structur	03	GABLE/HIP 100
Roof Cover	03	COMP SHNGL 100
Interior Wall	02	WALL BD/WD 100
Interior Floo	14	CARPET 90
Interior Floo	08	SHT VINYL 10
Air Condition	03	CENTRAL 100
Heating Type	04	AIR DUCTED 100
Bedrooms		2 100
Bathrooms		2 100
Frame	01	NONE 100
Stories	1.	1. 100
Architectual	05	CONV 100
Units		0 100
Condition Adj	02	02 100
Kitchen Adjus	01	01 100
Quality	03	03
DOR CODE	0100	SINGLE FAMILY
MAP NUM		MKT AREA 06
NEIGHBORHOOD/LOC	32317.060	1.00/

AREA TYPE	TOTAL GROSS AREA	PCT OF BASE	YEAR	TOT ADJ AREA	SUBAREA MARKET VALUE
APT	338	100		338	9,564
BAS	1,978	100		1,978	55,970
FCP	598	25		150	4,244
FOP	45	30		14	396
FOP	220	30		66	1,868
UDU	338	55		186	5,263
TOTALS	3,517			2,732	77,305

MARKET ADJUSTMENTS

TYPE	MDL	EFF. AREA	TOT ADJ PTS	EFF. BASE RATE	REPL. COST NEW	AYB	EYB	ECON	FNCT	AP	NORM	% COND
0100	01	2,732	62.0525	70.74	193,262	1920	1960	0	0	25	35.00	40.00

1 SINGLE FAM 0% - 0 Heated Area: 2316 HX Base Yr

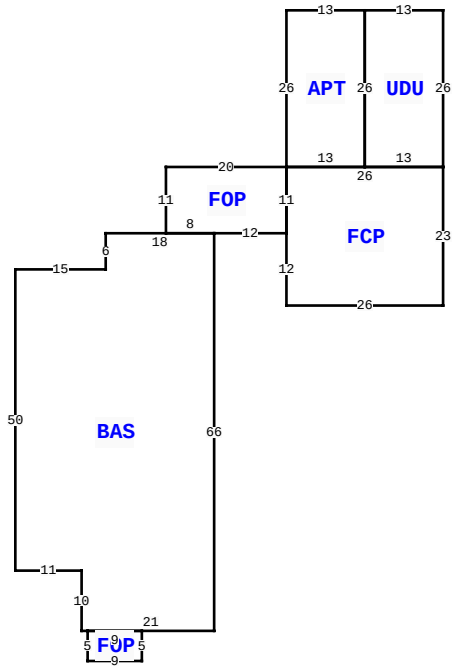

444 SE HERNANDO AVE, LAKE CITY

BLD DATE		LGL DATE	
XF DATE		LAND DATE	
INC DATE		AG DATE	

VALUATION SUMMARY

VALUATION BY	STANDARD
Tax Group: 1	Tax Dist:
BUILDING MARKET VALUE	77,305
TOTAL MARKET OB/XF VALUE	0
TOTAL LAND VALUE - MARKET	7,320
TOTAL MARKET VALUE	84,625
SOH/AGL Deduction	0
ASSESSED VALUE	84,625
TOTAL EXEMPTION VALUE	0
BASE TAXABLE VALUE	84,625
TOTAL JUST VALUE	84,625
NCON VALUE	0
INCOME VALUE	
PREVIOUS YEAR MKT VALUE	83,270

PERMIT NUM	DESCRIPTION	AMT	ISSUED

SALES DATA

OFF RECORD Number	DATE	TYPE INST	Q U	V I	RSN CD	SALE PRICE
0789/1139	4/01/1994	WD	Q	I		54,000
GRANTOR: GREASON-SCHOEPF						
GRANTEE: LORI ANN WILLIAMS B						
0593/0205	5/01/1986	WD	Q	I	01	1
GRANTOR:						
GRANTEE:						

BUILDING NOTES

BUILDING DIMENSIONS

BAS= W15 S50 E11 S10 E1 FOP= S5 E9 N5 W9$ E21 N66 FOP= E12 FCP= S12 E26 N23 W26 S11$ N11 APT= E13 UDU= E13 N26 W13 S26$ N26 W13 S26$ W20 S11 E8$ W18 S6$.

EXTRA FEATURES

LN	OB/XF CODE	DESCRIPTION	BLD	CAP	L	W	UNITS	UT	Adj R	ADJ UNIT PRICE	ORIG COND	YEAR ON	YEAR ACTUAL	Q	% COND	OB/XF MKT VALUE	NOTES

LAND DESCRIPTION

TOTAL OB/XF 0

LN	USE CODE	CLS	LAND USE DESCRIPTION	CAP	RD	LOC ZONE	FRONT	DEPTH	TOT LND UTS	UNIT TYPE	DT	DPTH FACT	% COND	TOT ADJ	UNIT PRICE	ADJ UNIT PRICE	LAND VALUE	OTHER ADJUSTMENTS AND NOTES	YEAR	DENSITY	DECL	FRZ	YR	CONSRV
1	0100	C	SFR	0		CG	80.00	122.00	9,760.00	SF		1.00	1.00	1.00	0.75	0.75	7,320							

REVIEW DATE 10/26/2016 BY DF Total Acres: 0.22 Total Land Value: 7,320 Market: 0 Agricultural: 0 Common: 7,320 PRINTED 05/08/2026 BY SYS