LOT 20 BLOCK C CANOVA S/D.

849-1296, QC 1331-2068, QC 1531-

MCKELLUM LESTER
480 NW GIBSON LN
LAKE CITY, FL 32055

2026

00-00-00-13705-001

COLUMBIA COUNTY PROPERTY

BUILDING CHARACTERISTICS

ELEMENT	CD	CONSTRUCTION
Exterior Wall	03	BELOW AVG. 100
Roof Structur	03	GABLE/HIP 100
Roof Cover	03	COMP SHNGL 100
Interior Wall	05	DRYWALL 70
Interior Wall	02	WALL BD/WD 30
Interior Floo	09	PINE WOOD 60
Interior Floo	06	VINYL ASB 40
Air Condition	02	WINDOW 100
Heating Type	04	AIR DUCTED 100
Bedrooms		2 100
Bathrooms		1 100
Frame	01	NONE 100
Stories	1.	1. 100
Architectual	05	CONV 100
Units		0 100
Condition Adj	02	02 100
Kitchen Adjus	01	01 100
Quality	05	05
DOR CODE	0100	SINGLE FAMILY
MAP NUM		MKT AREA 06
NEIGHBORHOOD/LOC	870317.00	1.00/

AREA TYPE	TOTAL GROSS AREA	PCT OF BASE	YEAR	TOT ADJ AREA	SUBAREA MARKET VALUE
BAS	1,309	100		1,309	66,188
FSP	48	40		19	961
UOP	63	20		13	657
USP	45	35		16	809
TOTALS	1,465			1,357	68,615

MARKET ADJUSTMENTS

TYPE	MDL	EFF. AREA	TOT ADJ PTS	EFF. BASE RATE	REPL. COST NEW	AYB	EYB	ECON	FNCT		NORM	% COND
0100	01	1,357	68.2344	77.79	105,561	1920	1920	0	0	0	35.00	65.00

1 SINGLE FAM 0% - 2025 Heated Area: 1309 HX Base Yr

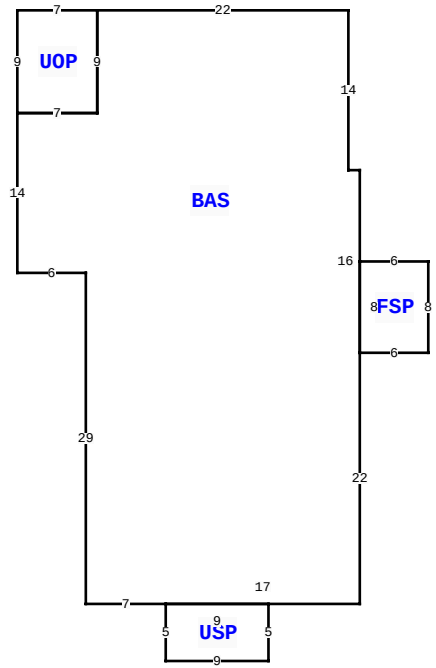

387 SE CHURCH AVE, LAKE CITY

BLD DATE		LGL DATE	
XF DATE		LAND DATE	
INC DATE		AG DATE	

VALUATION SUMMARY

VALUATION BY	STANDARD
Tax Group: 1	Tax Dist:
BUILDING MARKET VALUE	68,615
TOTAL MARKET OB/XF VALUE	500
TOTAL LAND VALUE - MARKET	6,300
TOTAL MARKET VALUE	75,415
SOH/AGL Deduction	0
ASSESSED VALUE	75,415
TOTAL EXEMPTION VALUE	0
BASE TAXABLE VALUE	75,415
TOTAL JUST VALUE	75,415
NCON VALUE	0
INCOME VALUE	
PREVIOUS YEAR MKT VALUE	74,206

PERMIT NUM	DESCRIPTION	AMT	ISSUED

SALES DATA

OFF RECORD Number	DATE	TYPE INST	Q / U	V / I	RSN CD	SALE PRICE
1531/1299	12/12/2024	QC	U	I	11	100
GRANTOR: MCKELLUM DAVID LESTER						
GRANTEE: MCKELLUM LESTER						
1331/2068	2/21/2017	QC	U	I	11	100
GRANTOR: LESTER MCKELLUM						
GRANTEE: DAVID LESTER MCKELL						

BUILDING NOTES

BUILDING DIMENSIONS

BAS= W22 UOP= W7 S9 E7 N9$ S9 W7 S14 E6 S29 E7 USP= S5 E9 N5 W9$ E17 N22 FSP= E6 N8W6 S8$ N16 W1 N14 $.

EXTRA FEATURES

LN	OB/XF CODE	DESCRIPTION	BLD	CAP	L	W	UNITS	UT	Adj R	ADJ UNIT PRICE	ORIG COND	YEAR ON	YEAR ACTUAL	Q	% COND	OB/XF MKT VALUE	NOTES
1	0294	SHED WOOD/	0	0	0	0	1.00	UT	0.00	0.00	100	2011	2011	3	100	100	
2	0296	SHED METAL	0	0	0	0	1.00	UT	0.00	0.00	100	2011	2011	3	100	400	

LAND DESCRIPTION

TOTAL OB/XF 500

LN	USE CODE	CLS	LAND USE DESCRIPTION	CAP	RD	LOC ZONE	FRONT	DEPTH	TOT LND UTS	UNIT TYPE	DT	DPTH FACT	% COND	TOT ADJ	UNIT PRICE	ADJ UNIT PRICE	LAND VALUE	OTHER ADJUSTMENTS AND NOTES	YEAR	DENSITY	DECL	FRZ	YR	CONSRV
1	0100	C	SFR	0		A-1	60.00	140.00	8,400.00	SF		1.00	1.00	1.00	0.75	0.75	6,300							

REVIEW DATE 10/11/2016 BY DF Total Acres: 0.19 Total Land Value: 6,300 Market: 0 Agricultural: 0 Common: 6,300 PRINTED 05/08/2026 BY SYS