S DIV: LOTS 9, 10 & 11 BLOCK 3 C

WD 1087-194, CT 1269-2285, WD 12

FLORIDA CONFERENCE ASSOCIATION OF SEVENTH DAY ADVE
351 S STATE RD 434
ALTAMONTE SPRINGS, FL 32714-3824

2026

00-00-00-13586-000

COLUMBIA COUNTY PROPERTY

BUILDING CHARACTERISTICS

ELEMENT	CD	CONSTRUCTION
Exterior Wall	17	MSNRY STUC 100
Roof Structur	09	RIDGE FRME 100
Roof Cover	03	COMP SHNGL 100
Interior Wall	05	DRYWALL 90
Interior Wall	04	PLYWOOD 10
Interior Floo	14	CARPET 80
Interior Floo	08	SHT VINYL 20
Ceiling	02	F.NOT SUS 100
Air Condition	06	ENG CENTRL 100
Heating Type	09	ENG F AIR 100
Fixtures		12 100
Frame	03	MASONRY 100
Story Height		8 100
RMS		20 100
Stories	0	0 100
Units		0 100
Condition Adj	03	03 100
Quality	05	05
DOR CODE	7100	CHURCHES-EX
MAP NUM		MKT AREA 06
NEIGHBORHOOD/LOC	870317.00	1.00/

AREA TYPE	TOTAL GROSS AREA	PCT OF BASE	YEAR	TOT ADJ AREA	SUBAREA MARKET VALUE
BAS	1,120	100		1,120	40,522
BAS	1,455	100		1,455	52,642
BAS	3,484	100		3,484	126,051
CAN	40	30		12	434
CAN	98	30		29	1,049
CAN	112	30		34	1,230
CAN	222	30		67	2,424
CAN	607	30		182	6,585
UDU	80	40		32	1,158
TOTALS	7,218			6,415	232,094

MARKET ADJUSTMENTS

TYPE	MDL	EFF. AREA	TOT ADJ PTS	EFF. BASE RATE	REPL. COST NEW	AYB	EYB	ECON	FNCT		NORM	% COND
9100	04	6,415	93.9704	72.36	464,189	1975	1975	0	0	0	50.00	50.00

1 CHURCH 0% - 0 Heated Area: 6059 HX Base Yr

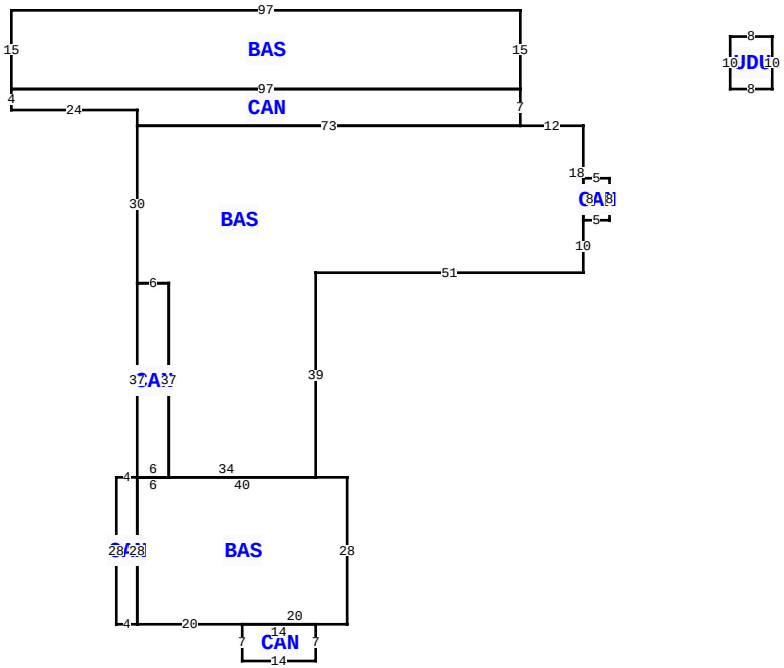

448 SE AVALON AVE, LAKE CITY

BLD DATE		LGL DATE	
XF DATE		LAND DATE	05/12/2026 MLU
INC DATE		AG DATE	

VALUATION SUMMARY

VALUATION BY		STANDARD
Tax Group: 1	Tax Dist:	
BUILDING MARKET VALUE		232,094
TOTAL MARKET OB/XF VALUE		3,557
TOTAL LAND VALUE - MARKET		44,156
TOTAL MARKET VALUE		279,807
SOH/AGL Deduction		3,996
ASSESSED VALUE		275,811
TOTAL EXEMPTION VALUE	02	275,811
BASE TAXABLE VALUE		0
TOTAL JUST VALUE		279,807
NCON VALUE		0
INCOME VALUE		
PREVIOUS YEAR MKT VALUE		257,729

PERMIT NUM	DESCRIPTION	AMT	ISSUED

SALES DATA

OFF RECORD Number	DATE	TYPE INST	Q U	V I	RSN CD	SALE PRICE
1291/2075	3/16/2015	WD	U	I	12	190,000
GRANTOR: FLORIDA CREDIT UNION						
GRANTEE: FLORIDA CONFERENCE						
1269/2285	2/05/2014	CT	U	I	18	100
GRANTOR: CLERK OF COURT (KIDDI						
GRANTEE: FLORIDA CREDIT UNIO						

BUILDING NOTES

BUILDING DIMENSIONS

BAS= N15 W97 S15 E97$ CAN= W97 S4 E24 S3 E73 BAS= W73 S30 CAN= S37 E6 N37 W6$ E6 S37 W6 CAN= W4 S28 E4 N28$ BAS= S28 E20 CAN= S7 E14 N7 W14$ E20 N28 W40$E34 N39 E51 N10 CAN= E5 N8 W5 S8$ N18 W12$ N7$ PTR= E40 UDU= E8 N10 W8 S10$ W40$.

EXTRA FEATURES

LN	OB/XF CODE	DESCRIPTION	BLD	CAP	L	W	UNITS	UT	Adj R	ADJ UNIT PRICE	ORIG COND	YEAR ON	YEAR ACTUAL	Q	% COND	OB/XF MKT VALUE	NOTES
1	0166	CONC,PAVMT	0	0	0	0	238.00	UT	1.50	1.50	100	1996	1996	3	100	357	
2	0169	FENCE/WOOD	0	0	0	0	160.00	UT	20.00	20.00	100	2007	2007	3	100	3,200	

LAND DESCRIPTION

TOTAL OB/XF 3,557

LN	USE CODE	CLS	LAND USE DESCRIPTION	CAP	RD	LOC ZONE	FRONT	DEPTH	TOT LND UTS	UNIT TYPE	DT	DPTH FACT	% COND	TOT ADJ	UNIT PRICE	ADJ UNIT PRICE	LAND VALUE	OTHER ADJUSTMENTS AND NOTES	YEAR	DENSITY	DECL	FRZ	YR	CONSRV
1	7100	C	CHURCH	0		RO	176.00	147.00	25,974.00	SF		1.00	1.00	0.85	2.00	1.70	44,156							

REVIEW DATE 11/09/2016 BY DF Total Acres: 0.60 Total Land Value: 44,156 Market: 0 Agricultural: 0 Common: 44,156 PRINTED 06/09/2026 BY SYS