(AKA LOT 6 RIVER FRONT UNR S/D D
COR OF NE1/4, N 400 FT, SE 1486.
CONT SE 297 FT, S 1602.27 FT TO

BAKER TRACY
9155 S DADELAND BLVD, STE 1708
MIAMI, FL 33156

2026

36-7S-16-04351-026

COLUMBIA COUNTY PROPERTY

BUILDING CHARACTERISTICS

ELEMENT	CD	CONSTRUCTION
Exterior Wall	26	ALM SIDING 100
Roof Structur	01	FLAT 100
Roof Cover	01	MINIMUM 100
Interior Wall	05	DRYWALL 100
Interior Floo	14	CARPET 90
Interior Floo	08	SHT VINYL 10
Air Condition	02	WINDOW 100
Heating Type	03	FORCED AIR 100
Bedrooms		1 100
Bathrooms		1 100
Stories	1.	1. 100
Architectual	01	CONV 100
Units		0 100
Condition Adj	03	03 100
Kitchen Adjus	01	01 100
Quality	05	05

DOR CODE	0102	SFRES/MOBILE HOME	
MAP NUM		MKT AREA	02
NEIGHBORHOOD/LOC	36716.00	1.00/	

AREA TYPE	TOTAL GROSS AREA	PCT OF BASE	YEAR	TOT ADJ AREA	SUBAREA MARKET VALUE
BAS	240	100		240	18,376
TOTALS	240			240	18,376

MARKET ADJUSTMENTS

TYPE	MDL	EFF. AREA	TOT ADJ PTS	EFF. BASE RATE	REPL. COST NEW	AYB	EYB	ECON	FNCT		NORM	% COND
0202	02	240	97.9000	96.92	23,261	2002	2015	0	0	0	21.00	79.00

1 MANUF 2 0% - 2024 Heated Area: 240 HX Base Yr

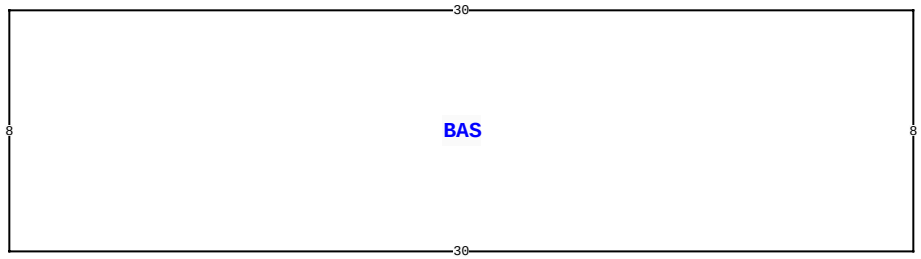

268 SW LANGELIER DR, FORT WHITE

BLD DATE		LGL DATE	
XF DATE		LAND DATE	03/31/2022 MLU
INC DATE		AG DATE	

VALUATION SUMMARY

VALUATION BY	STANDARD
Tax Group: 3	Tax Dist:
BUILDING MARKET VALUE	567,152
TOTAL MARKET OB/XF VALUE	47,210
TOTAL LAND VALUE - MARKET	136,500
TOTAL MARKET VALUE	750,862
SOH/AGL Deduction	0
ASSESSED VALUE	750,862
TOTAL EXEMPTION VALUE	0
BASE TAXABLE VALUE	750,862
TOTAL JUST VALUE	750,862
NCON VALUE	0
INCOME VALUE	
PREVIOUS YEAR MKT VALUE	757,737

PERMIT NUM	DESCRIPTION	AMT	ISSUED
000047376	Electrical Servic	0	06/02/2023
29188	SFR	1,014	02/16/2011

SALES DATA

OFF RECORD Number	DATE	TYPE INST	Q U /	V I /	RSN CD	SALE PRICE
1489/287	4/25/2023	WD	Q	I	01	1,100,000
GRANTOR: SCOTT LANCE						
GRANTEE: BAKER TRACY						
1130/1566	9/04/2007	WD	Q	I		370,000
GRANTOR: FREDERICK & KATHRYN F						
GRANTEE: LANCE SCOTT & PAMEL						

BUILDING NOTES

BUILDING DIMENSIONS

BAS= W30 S8 E30 N8$.

EXTRA FEATURES

LN	OB/XF CODE	DESCRIPTION	BLD	CAP	L	W	UNITS	UT	Adj R	ADJ UNIT PRICE	ORIG COND	YEAR ON	YEAR ACTUAL	Q	% COND	OB/XF MKT VALUE	NOTES
1	0296	SHED METAL	0	0	12	36	432.00	UT	20.00	20.00	100	2003	2003	3	100	8,640	
2	0296	SHED METAL	0	0	12	36	432.00	UT	20.00	20.00	100	2003	2003	3	100	8,640	
3	9946	Well	0	0	0	0	1.00	UT	4,000.00	4,000.00	100			3	100	4,000	
4	0296	SHED METAL	0	0	14	36	504.00	UT	20.00	20.00	100	2003	2003	3	100	10,080	
5	9947	Septic	0	0	0	0	1.00	UT	3,000.00	3,000.00	100			3	100	3,000	
6	0040	BARN,POLE	0	0	0	0	1.00	UT	0.00	0.00	100	2010	2010	3	100	200	
7	0261	PRCH, UOP	0	0	0	0	1.00	UT	0.00	0.00	100	2010	2010	3	100	50	
8	0261	PRCH, UOP	0	0	0	0	1.00	UT	0.00	0.00	100	2010	2010	3	100	50	
9	0261	PRCH, UOP	0	0	0	0	1.00	UT	0.00	0.00	100	2010	2010	3	100	100	
10	0080	DECKING	0	0	0	0	1.00	UT	0.00	0.00	100	2010	2010	3	100	3,000	

TOTAL OB/XF 37,760

LAND DESCRIPTION

LN	USE CODE	CLS	LAND USE DESCRIPTION	CAP	RD	LOC ZONE	FRONT	DEPTH	TOT LND UTS	UNIT TYPE	DT	DPTH FACT	% COND	TOT ADJ	UNIT PRICE	ADJ UNIT PRICE	LAND VALUE	OTHER ADJUSTMENTS AND NOTES	YEAR	DENSITY	DECL	FRZ	YR	CONSRV
1	0102	C	SFR/MH	0		00	0.00	0.00	10.50	AC		1.00	1.00	1.00	13,000.00	13,000.00	136,500							

REVIEW DATE 10/09/2023 BY ME Total Acres: 10.50 Total Land Value: 136,500 Market: 0 Agricultural: 0 Common: 136,500 PRINTED 11/07/2025 BY SYS

(AKA LOT 6 RIVER FRONT UNR S/D D
COR OF NE1/4, N 400 FT, SE 1486.
CONT SE 297 FT, S 1602.27 FT TO

BAKER TRACY
9155 S DADELAND BLVD, STE 1708
MIAMI, FL 33156

2026

36-7S-16-04351-026

COLUMBIA COUNTY PROPERTY

BUILDING CHARACTERISTICS

ELEMENT	CD	CONSTRUCTION
Exterior Wall	32	HARDIE BRD 100
Roof Structur	08	IRREGULAR 100
Roof Cover	03	COMP SHNGL 100
Interior Wall	05	DRYWALL 100
Interior Floo	12	HARDWOOD 80
Interior Floo	14	CARPET 20
Air Condition	03	CENTRAL 100
Heating Type	04	AIR DUCTED 100
Bedrooms		2 100
Bathrooms		2 100
Frame	02	WOOD FRAME 100
Stories	2.	2. 100
Architectual	05	CONV 100
Units		0 100
Condition Adj	04	04 100
Quality	07	07
DOR CODE	0102	SFRES/MOBILE HOME
MAP NUM		MKT AREA 02
NEIGHBORHOOD/LOC	36716.00	1.00/

AREA TYPE	TOTAL GROSS AREA	PCT OF BASE	YEAR	TOT ADJ AREA	SUBAREA MARKET VALUE
BAS	2,250	100		2,250	363,803
FCP	2,240	25	2024	560	90,546
FOP	874	30		262	42,362
FSP	84	40		34	5,498
FUS	288	100		288	46,567
TOTALS	5,736			3,394	548,776

MARKET ADJUSTMENTS

TYPE	MDL	EFF. AREA	TOT ADJ PTS	EFF. BASE RATE	REPL. COST NEW	AYB	EYB	ECON	FNCT		NORM	% COND
0300	01	3,394	139.5060	170.20	577,659	2011	2020	0	0	0	5.00	95.00

2 SFR PILING 0% - 2024 Heated Area: 2538 HX Base Yr

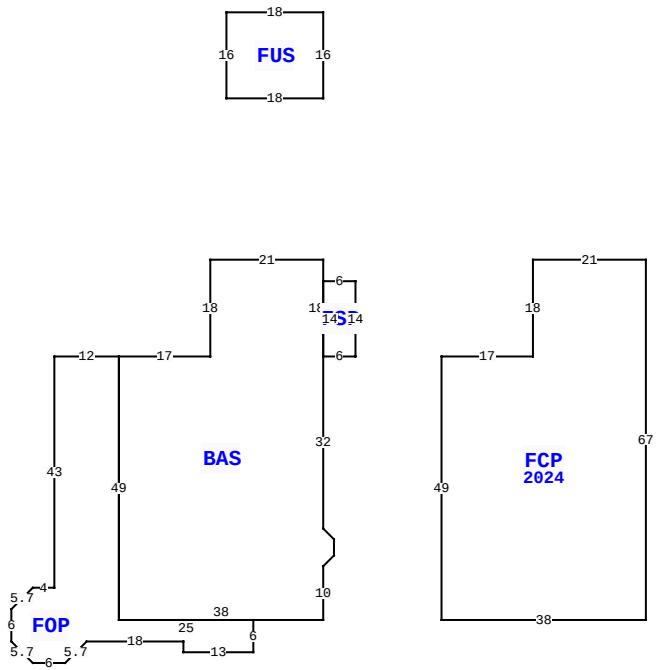

268 SW LANGELIER DR, FORT WHITE

BLD DATE		LGL DATE	
XF DATE		LAND DATE	03/31/2022 MLU
INC DATE		AG DATE	

VALUATION SUMMARY

VALUATION BY	STANDARD
Tax Group: 3	Tax Dist:
BUILDING MARKET VALUE	567,152
TOTAL MARKET OB/XF VALUE	47,210
TOTAL LAND VALUE - MARKET	136,500
TOTAL MARKET VALUE	750,862
SOH/AGL Deduction	0
ASSESSED VALUE	750,862
TOTAL EXEMPTION VALUE	0
BASE TAXABLE VALUE	750,862
TOTAL JUST VALUE	750,862
NCON VALUE	0
INCOME VALUE	
PREVIOUS YEAR MKT VALUE	757,737

PERMIT NUM	DESCRIPTION	AMT	ISSUED

SALES DATA

OFF RECORD Number	DATE	TYPE INST	Q U	V I	RSN CD	SALE PRICE
1489/287	4/25/2023	WD	Q	I	01	1,100,000
GRANTOR: SCOTT LANCE						
GRANTEE: BAKER TRACY						
1130/1566	9/04/2007	WD	Q	I		370,000
GRANTOR: FREDERICK & KATHRYN F						
GRANTEE: LANCE SCOTT & PAMEL						

BUILDING NOTES

BUILDING DIMENSIONS

BAS=[ORIG=0,0] W21 S18 W17 S49 E38 N10 U2R2 N3 U2L2 N32 N18 $
FOP=[ORIG=-38,18] W12 S43 W4 D4L4 S6 D4R4 E6 U4R4 E18 S2 E13 N6 W25 N49 $
FUS=[ORIG=0,-30] N16 W18 S16 E18 $
FSP=[ORIG=0,18] E6 N14 W6 S14 $
PTR=[ORIG=0,0] N30 S30 $
FCP=[YR=2024;ORIG=60,0] W21 S18 W17 S49 E38 N67 $
.

EXTRA FEATURES

LN	OB/XF CODE	DESCRIPTION	BLD	CAP	L	W	UNITS	UT	Adj R	ADJ UNIT PRICE	ORIG COND	YEAR ON	YEAR ACTUAL	Q	% COND	OB/XF MKT VALUE	NOTES
11	0180	FPLC 1STRY	0	0	0	0	1.00	UT	2,000.00	2,000.00	100	2011	2011	3	100	2,000	
12	0252	LEAN-TO W/	0	0	0	0	1.00	UT	0.00	0.00	100	2015	2015	3	100	100	
13	0070	CARPORT UF	0	0	0	0	1.00	UT	0.00	0.00	100	2015	2015	3	100	300	
14	0084	DOCK-RIVER	0	0	0	0	1.00	UT	2,500.00	2,500.00	100	2024	2023		78	1,950	
15	0104	GENERATOR	0	0	0	0	1.00	UT	6,000.00	6,000.00	100	2024	2023		85	5,100	

LAND DESCRIPTION

TOTAL OB/XF 9,450

LN	USE CODE	CLS	LAND USE DESCRIPTION	CAP	RD	LOC ZONE	FRONT	DEPTH	TOT LND UTS	UNIT TYPE	DT	DPTH FACT	% COND	TOT ADJ	UNIT PRICE	ADJ UNIT PRICE	LAND VALUE	OTHER ADJUSTMENTS AND NOTES	YEAR	DENSITY	DECL	FRZ	YR	CONSRV

REVIEW DATE 10/09/2023 BY ME Total Acres: 10.50 Total Land Value: 136,500 Market: 0 Agricultural: 0 Common: 136,500 PRINTED 11/07/2025 BY SYS