LOT 35 & EAST 426.02 FT OF LOT 3
S/D.

ALFORD PHILLIP J JR/ALFORD JACKILYN DORENE
448 SW OLD NIBLACK AVE
FORT WHITE, FL 32038

2026

36-6S-16-04076-135

COLUMBIA COUNTY PROPERTY

BUILDING CHARACTERISTICS

ELEMENT	CD	CONSTRUCTION
Exterior Wall	31	VINYL SID 100
Roof Structur	03	GABLE/HIP 100
Roof Cover	03	COMP SHNGL 100
Interior Wall	05	DRYWALL 100
Interior Floo	14	CARPET 90
Interior Floo	08	SHT VINYL 10
Air Condition	03	CENTRAL 100
Heating Type	04	AIR DUCTED 100
Bedrooms		3 100
Bathrooms		1 100
Stories	1.	1. 100
Architectual	01	CONV 100
Units		0 100
Condition Adj	03	03 100
Kitchen Adjus	01	01 100
Quality	05	05
DOR CODE	0200	MOBILE HOME
MAP NUM		MKT AREA 02
NEIGHBORHOOD/LOC	36616.020	1.00/

AREA TYPE	TOTAL GROSS AREA	PCT OF BASE	YEAR	TOT ADJ AREA	SUBAREA MARKET VALUE
BAS	264	100		264	15,274
BAS	1,408	100		1,408	81,459
USP	240	35		84	4,860
USP	288	35		101	5,843
TOTALS	2,200			1,857	107,436

MARKET ADJUSTMENTS

TYPE	MDL	EFF. AREA	TOT ADJ PTS	EFF. BASE RATE	REPL. COST NEW	AYB	EYB	ECON	FNCT		NORM	% COND
0201	02	1,857	111.9000	105.19	195,338	2000	1999	0	0	0	45.00	55.00

1 MANUF 1 50% - 2000 Heated Area: 1672 HX Base Yr 2000

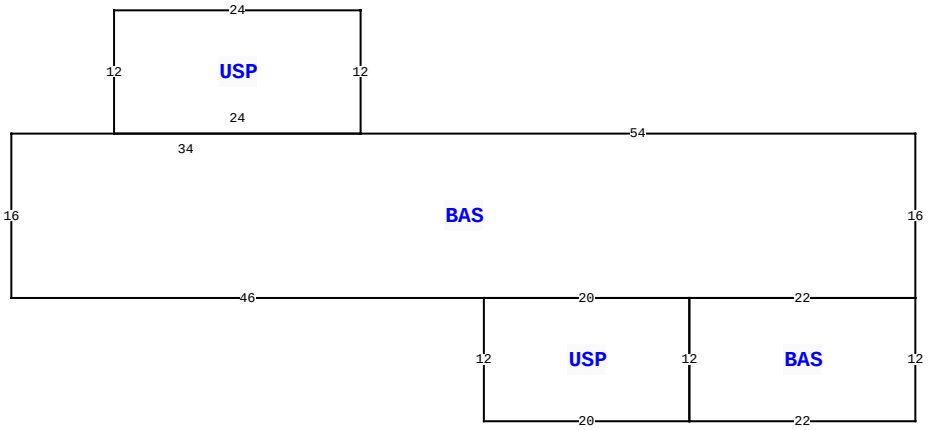

330 SW OLD NIBLACK AVE, FORT WHITE

BLD DATE		LGL DATE	
XF DATE		LAND DATE	04/07/2025 MLU
INC DATE		AG DATE	

VALUATION SUMMARY

VALUATION BY		STANDARD
Tax Group: 3	Tax Dist:	
BUILDING MARKET VALUE		190,115
TOTAL MARKET OB/XF VALUE		20,000
TOTAL LAND VALUE - MARKET		76,000
TOTAL MARKET VALUE		286,115
SOH/AGL Deduction		96,337
ASSESSED VALUE		189,778
TOTAL EXEMPTION VALUE	HA HAB	25,000
BASE TAXABLE VALUE		164,778
TOTAL JUST VALUE		286,115
NCON VALUE		0
INCOME VALUE		
PREVIOUS YEAR MKT VALUE		286,115

PERMIT NUM	DESCRIPTION	AMT	ISSUED
22315	M H	268	09/16/2004
19508	PUMP/UTPOL	30	05/03/2002
15879	M H	125	08/09/1999

SALES DATA

OFF RECORD Number	DATE	TYPE INST	Q U	V I	RSN CD	SALE PRICE
1248/2491	2/01/2013	PB	U	I	18	100
GRANTOR: CLERK OF COURT (PHIL						
GRANTEE: PHILLIP ALFORD JR &						
1248/2487	2/01/2013	PB	U	I	18	100
GRANTOR: CLERK OF COURT (PHIL						
GRANTEE: PHILLIP ALFORD JR &						

BUILDING NOTES

BUILDING DIMENSIONS

BAS= W54 USP= N12 W24 S12 E24$ W34 S16 E46 USP= S12 E20 N12 W20$ E20 BAS= S12 E22 N12 W22$ E22 N16$.

EXTRA FEATURES

LN	OB/XF CODE	DESCRIPTION	BLD	CAP	L	W	UNITS	UT	Adj R	ADJ UNIT PRICE	ORIG COND	YEAR ON	YEAR ACTUAL	Q	% COND	OB/XF MKT VALUE	NOTES
1	0040	BARN,POLE	0	50	0	0	1.00	UT	0.00	0.00	100	2010	2010	3	100	200	
2	0041	BARN,MACH	0	50	0	0	1.00	UT	0.00	0.00	100	2010	2010	3	100	1,800	
3	9945	Well/Sept	0	50	0	0	1.00	UT	7,000.00	7,000.00	100			3	100	7,000	
4	9945	Well/Sept	0	0	0	0	1.00	UT	7,000.00	7,000.00	100			3	100	7,000	
5	9946	Well	0	0	0	0	1.00	UT	4,000.00	4,000.00	100			3	100	4,000	

LAND DESCRIPTION

TOTAL OB/XF 20,000

LN	USE CODE	CLS	LAND USE DESCRIPTION	CAP	RD	LOC ZONE	FRONT	DEPTH	TOT LND UTS	UNIT TYPE	DT	DPTH FACT	% COND	TOT ADJ	UNIT PRICE	ADJ UNIT PRICE	LAND VALUE	OTHER ADJUSTMENTS AND NOTES	YEAR	DENSITY	DECL	FRZ	YR	CONSRV
1	0200	C	MBL HM	50		RSF/MH	0.00	0.00	7.00	AC		1.00	1.00	1.00	9,500.00	9,500.00	66,500							
2	0000	C	VAC RES	0			0.00	0.00	1.00	AC		1.00	1.00	1.00	9,500.00	9,500.00	9,500							

REVIEW DATE 06/25/2015 BY DF Total Acres: 8.00 Total Land Value: 76,000 Market: 0 Agricultural: 0 Common: 76,000 PRINTED 10/03/2025 BY SYS

LOT 35 & EAST 426.02 FT OF LOT 3
S/D.

ALFORD PHILLIP J JR/ALFORD JACKILYN DORENE
448 SW OLD NIBLACK AVE
FORT WHITE, FL 32038

2026

36-6S-16-04076-135

BUILDING CHARACTERISTICS

ELEMENT	CD	CONSTRUCTION
Exterior Wall	31	VINYL SID 100
Roof Structur	03	GABLE/HIP 100
Roof Cover	03	COMP SHNGL 100
Interior Wall	05	DRYWALL 100
Interior Floo	14	CARPET 90
Interior Floo	08	SHT VINYL 10
Air Condition	03	CENTRAL 100
Heating Type	04	AIR DUCTED 100
Bedrooms		3 100
Bathrooms		2 100
Stories	1.	1. 100
Architectual	01	CONV 100
Units		0 100
Quality	05	05
DOR CODE	0200	MOBILE HOME
MAP NUM		MKT AREA 02
NEIGHBORHOOD/LOC	36616.020	1.00/

AREA TYPE	TOTAL GROSS AREA	PCT OF BASE	YEAR	TOT ADJ AREA	SUBAREA MARKET VALUE
BAS	1,404	100		1,404	82,679
TOTALS	1,404			1,404	82,679

MARKET ADJUSTMENTS

TYPE	MDL	EFF. AREA	TOT ADJ PTS	EFF. BASE RATE	REPL. COST NEW	AYB	EYB	ECON	FNCT		NORM	% COND
0201	02	1,404	113.9000	107.07	150,326	2002	2002	0	0	0	45.00	55.00

2 MANUF 1 0% - 2000 Heated Area: 1404 HX Base Yr 2000

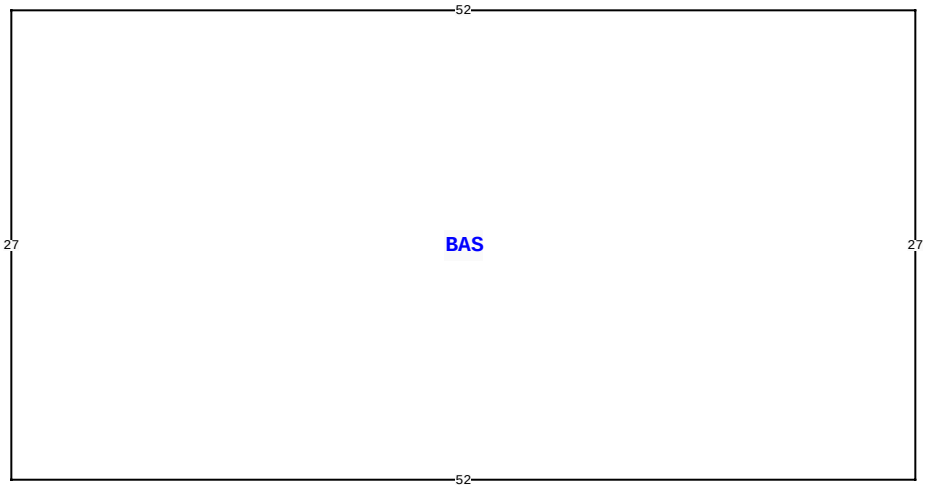

330 SW OLD NIBLACK AVE, FORT WHITE

BLD DATE		LGL DATE	
XF DATE		LAND DATE	04/07/2025 MLU
INC DATE		AG DATE	

COLUMBIA COUNTY PROPERTY

PAGE 2 of 2 3

VALUATION SUMMARY

VALUATION BY		STANDARD
Tax Group: 3	Tax Dist:	
BUILDING MARKET VALUE		190,115
TOTAL MARKET OB/XF VALUE		20,000
TOTAL LAND VALUE - MARKET		76,000
TOTAL MARKET VALUE		286,115
SOH/AGL Deduction		96,337
ASSESSED VALUE		189,778
TOTAL EXEMPTION VALUE	HA HAB	25,000
BASE TAXABLE VALUE		164,778
TOTAL JUST VALUE		286,115
NCON VALUE		0
INCOME VALUE		
PREVIOUS YEAR MKT VALUE		286,115

PERMIT NUM	DESCRIPTION	AMT	ISSUED

SALES DATA

OFF RECORD Number	DATE	TYPE INST	Q / U	V / I	RSN CD	SALE PRICE
1248/2491	2/01/2013	PB	U	I	18	100
GRANTOR: CLERK OF COURT (PHIL						
GRANTEE: PHILLIP ALFORD JR &						
1248/2487	2/01/2013	PB	U	I	18	100
GRANTOR: CLERK OF COURT (PHIL						
GRANTEE: PHILLIP ALFORD JR &						

BUILDING NOTES

BUILDING DIMENSIONS

BAS= W52 S27 E52 N27$.

EXTRA FEATURES

L N	OB/XF CODE	DESCRIPTION	BLD	CAP	L	W	UNITS	UT	Adj R	ADJ UNIT PRICE	ORIG COND	YEAR ON	YEAR ACTUAL	Q	% COND	OB/XF MKT VALUE	NOTES

LAND DESCRIPTION

TOTAL OB/XF 0

L N	USE CODE	CLS	LAND USE DESCRIPTION	CAP	R D	LOC ZONE	FRONT	DEPTH	TOT LND UTS	UNIT TYPE	D T	DPTH FACT	% COND	TOT ADJ	UNIT PRICE	ADJ UNIT PRICE	LAND VALUE	OTHER ADJUSTMENTS AND NOTES	YEAR	DENSITY	DECL	FRZ	YR	CONSRV

REVIEW DATE 06/25/2015 BY DF Total Acres: 8.00 Total Land Value: 76,000 Market: 0 Agricultural: 0 Common: 76,000 PRINTED 10/03/2025 BY SYS