COMM SW COR OF SEC, RUN E
1329.29 FT, N 1286.47 FT FOR
POB, CONT N 1286.53 FT, E

MORSE POLLY COX
290 SE WILLOWHAVEN CRT
LAKE CITY, FL 32025

2026

36-4S-17-09049-003

COLUMBIA COUNTY PROPERTY

BUILDING CHARACTERISTICS

ELEMENT	CD	CONSTRUCTION
Exterior Wall	19	COMMON BRK 80
Exterior Wall	16	WD FR STUC 20
Roof Structur	08	IRREGULAR 100
Roof Cover	14	PREFIN MT 100
Interior Wall	05	DRYWALL 100
Interior Floo	14	CARPET 80
Interior Floo	08	SHT VINYL 20
Air Condition	03	CENTRAL 100
Heating Type	04	AIR DUCTED 100
Bedrooms		2 100
Bathrooms		3.5 100
Frame	01	NONE 100
Stories	1.5	1.5 100
Architectual	05	CONV 100
Units		0 100
Condition Adj	03	03 100
Kitchen Adjus	01	01 100
Quality	07	07
DOR CODE	5000	IMPROVED AG
MAP NUM		MKT AREA 02
NEIGHBORHOOD/LOC	36417.00	1.00/

AREA TYPE	TOTAL GROSS AREA	PCT OF BASE	YEAR	TOT ADJ AREA	SUBAREA MARKET VALUE
BAS	2,153	100		2,153	227,758
FGR	440	55		242	25,600
FOP	30	30		9	952
FOP	136	30		41	4,337
FOP	152	30		46	4,866
FUS	972	100		972	102,824
TOTALS	3,883			3,463	366,339

MARKET ADJUSTMENTS

TYPE	MDL	EFF. AREA	TOT ADJ PTS	EFF. BASE RATE	REPL. COST NEW	AYB	EYB	ECON	FNCT		NORM	% COND
0100	01	3,463	138.6993	155.34	537,942	1996	1996	0	0	0	31.90	68.10

1 SINGLE FAM 100% - 1997 Heated Area: 3125 HX Base Yr 1997

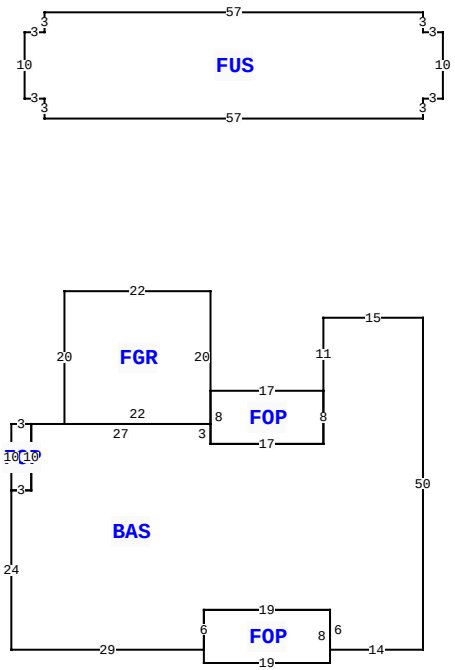

290 SE WILLOWHAVEN CT, LAKE CITY

BLD DATE		LGL DATE	
XF DATE		LAND DATE	04/07/2025 MLU
INC DATE		AG DATE	

VALUATION SUMMARY

VALUATION BY		STANDARD
Tax Group: 3	Tax Dist:	
BUILDING MARKET VALUE		366,339
TOTAL MARKET OB/XF VALUE		22,295
TOTAL LAND VALUE - MARKET		96,045
TOTAL MARKET VALUE		402,188
SOH/AGL Deduction		134,832
ASSESSED VALUE		267,356
TOTAL EXEMPTION VALUE	HX HB WX	55,722
BASE TAXABLE VALUE		211,634
TOTAL JUST VALUE		484,679
NCON VALUE		0
INCOME VALUE		
PREVIOUS YEAR MKT VALUE		490,596

PERMIT NUM	DESCRIPTION	AMT	ISSUED
10944	SFR	360	03/27/1996
10895	SFR	355	03/15/1996

SALES DATA

OFF RECORD Number	DATE	TYPE INST	Q U /	V I /	RSN CD	SALE PRICE
0756/0883	5/18/1990	WD	Q	V	02	0

GRANTOR: LOIS COX
GRANTEE: POLLY MORSE

BUILDING NOTES

BUILDING DIMENSIONS

BAS= W15 S11 FOP= W17 S8 E17N8$ S8 W17 N3 FGR= N20 W22 S20 E22$ W27 FOP= W3 S10 E3 N10$ S10 W3 S24 E29 FOP= S2 E19 N8 W19 S6$ N6 E19 S6 E14 N50$ PTR= N30 FUS= N3 E3 N10 W3 N3 W57 S3 W3 S10 E3 S3 E57$ S30$.

EXTRA FEATURES

LN	OB/XF CODE	DESCRIPTION	BLD	CAP	L	W	UNITS	UT	Adj R	ADJ UNIT PRICE	ORIG COND	YEAR ON	YEAR ACTUAL	Q	% COND	OB/XF MKT VALUE	NOTES
1	0190	FPLC PF	0	100	0	0	1.00	UT	1,200.00	1,200.00	100	1996	1996	3	100	1,200	
2	0166	CONC,PAVMT	0	100	0	0	763.00	UT	1.50	1.50	100	1996	1996	3	100	1,145	
3	0296	SHED METAL	0	100	0	0	1.00	UT	0.00	0.00	100	2005	2005	3	100	400	
4	0030	BARN,MT	0	0	30	40	1,200.00	UT	10.00	10.00	100	2005	2005	3	100	12,000	
5	0030	BARN,MT	0	0	25	25	625.00	UT	10.00	10.00	100	2005	2005	3	100	6,250	
6	0251	LEAN TO W/	0	100	0	0	1.00	UT	0.00	0.00	100	2017	2017	3	100	100	
7	0294	SHED WOOD/	0	100	0	0	1.00	UT	0.00	0.00	100	2017	2017	3	100	1,200	

LAND DESCRIPTION

TOTAL OB/XF 22,295

LN	USE CODE	CLS	LAND USE DESCRIPTION	CAP	RD	LOC ZONE	FRONT	DEPTH	TOT LND UTS	UNIT TYPE	DT	DPTH FACT	% COND	TOT ADJ	UNIT PRICE	ADJ UNIT PRICE	LAND VALUE	OTHER ADJUSTMENTS AND NOTES	YEAR	DENSITY	DECL	FRZ	YR	CONSRV
1	0100	C	SFR	100		A-1	0.00	0.00	1.00	AC		1.00	1.00	1.00	9,500.00	9,500.00	9,500							
2	5500	A	TIMBER 2	0		A-1	0.00	0.00	9.11	AC		1.00	1.00	1.00	445.00	445.00	4,054							
3	9910	M	MKT.VAL.AG	0		A-1	0.00	0.00	9.11	AC		1.00	1.00	1.00	9,500.00	9,500.00	86,545							

REVIEW DATE 07/18/2017 BY DF Total Acres: 10.11 Total Land Value: 13,554 Market: 86,545 Agricultural: 4,054 Common: 9,500 PRINTED 11/18/2025 BY SYS