LOT 11 SOUTHWOOD ACRES UNIT 3.
416-257-I, 596-359,
697-357, 1137-1274, QC 1314-

HUBER BARRY R & TERESA D/HUBER TERESA AS TRUSTEES
AS TRUSTEES, 865 SW HAMLET CIR
LAKE CITY, FL 32024-1881

2026

36-4S-16-03373-011

COLUMBIA COUNTY PROPERTY

BUILDING CHARACTERISTICS

ELEMENT	CD	CONSTRUCTION
Exterior Wall	10	ABOVE AVG. 100
Roof Structur	03	GABLE/HIP 100
Roof Cover	08	CLAY TILE 100
Interior Wall	05	DRYWALL 100
Interior Floo	14	CARPET 80
Interior Floo	15	HARDTILE 20
Air Condition	03	CENTRAL 100
Heating Type	04	AIR DUCTED 100
Bedrooms		4 100
Bathrooms		3 100
Frame	01	NONE 100
Stories	1.5	1.5 100
Architectual	05	CONV 100
Units		0 100
Condition Adj	03	03 100
Kitchen Adjus	01	01 100
Quality	07	07
DOR CODE	0100	SINGLE FAMILY
MAP NUM		MKT AREA 01
NEIGHBORHOOD/LOC	36416.010	1.00/

AREA TYPE	TOTAL GROSS AREA	PCT OF BASE	YEAR	TOT ADJ AREA	SUBAREA MARKET VALUE
BAS	2,347	100		2,347	242,559
FGR	1,218	55		670	69,244
FOP	72	30		22	2,274
FOP	195	30		58	5,994
FOP	240	30		72	7,441
FOP	300	30		90	9,302
FOP	745	30		224	23,150
FUS	1,363	100		1,363	140,864
PTO	324	5		16	1,654
UDG	648	55		356	36,792
TOTALS	8,100			5,444	562,631

MARKET ADJUSTMENTS

TYPE	MDL	EFF. AREA	TOT ADJ PTS	EFF. BASE RATE	REPL. COST NEW	AYB	EYB	ECON	FNCT		NORM	% COND
0100	01	5,444	128.1588	143.54	781,432	1976	1997	0	0	0	28.00	72.00

1 SINGLE FAM 100% - 0 Heated Area: 3710 HX Base Yr

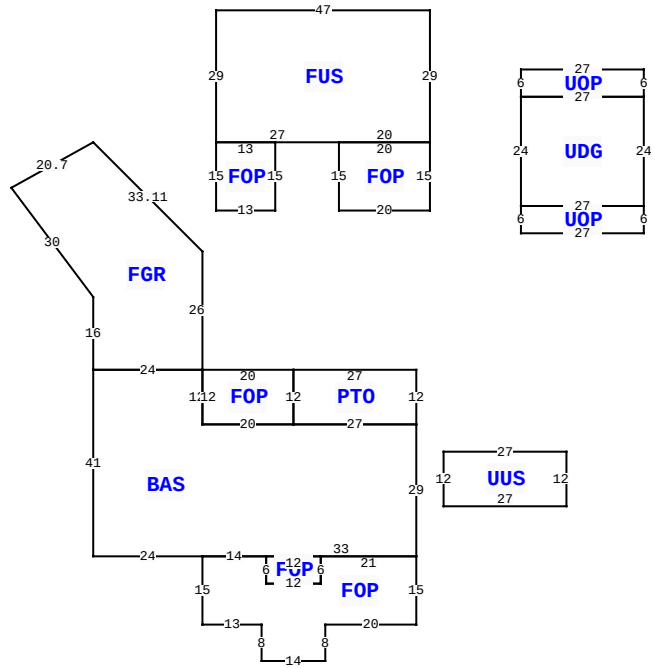

** This building has 13 Sub-Areas

865 SW HAMLET CIR, LAKE CITY

BLD DATE		LGL DATE	
XF DATE		LAND DATE	04/07/2025 MLU
INC DATE		AG DATE	

VALUATION SUMMARY

VALUATION BY		STANDARD
Tax Group: 3	Tax Dist:	
BUILDING MARKET VALUE		562,631
TOTAL MARKET OB/XF VALUE		17,598
TOTAL LAND VALUE - MARKET		33,264
TOTAL MARKET VALUE		613,493
SOH/AGL Deduction		288,228
ASSESSED VALUE		325,265
TOTAL EXEMPTION VALUE	HX HB	50,722
BASE TAXABLE VALUE		274,543
TOTAL JUST VALUE		613,493
NCON VALUE		0
INCOME VALUE		
PREVIOUS YEAR MKT VALUE		621,307

SALE:1:1: LOT 11, UNIT 3, SOUTHWOOD ACRES

PERMIT NUM	DESCRIPTION	AMT	ISSUED
12795	ADDN SFR	65	07/21/1997
12588	GARAGE	100	05/30/1997

SALES DATA

OFF RECORD Number	DATE	TYPE INST	Q U	V I	RSN CD	SALE PRICE
1401/1787	12/13/2019	WD	U	I	30	100
GRANTOR: BARRY R & TERESA HUBE						
GRANTEE: BARRY R & TERESA HU						
1314/0851	5/02/2016	QC	U	I	30	100
GRANTOR: BARRY R HUBER						
GRANTEE: BARRY R & TERESA HU						

BUILDING NOTES

BUILDING DIMENSIONS

BAS= W24 S41 E24 FOP= S15 E13 S8 E14 N8 E20 N15 W21 S6 W12 N6 W14$ E14 FOP= S6 E12 N6 W12$ E33 N29 PTO= N12 W27 S12 E27$ W27 FOP= N12 W20 S12E20$ W20 N12 FGR= N26 U24 L24 L18 D10 D24 R18 S16 E24$ PTR=N50 E50 FUS= N29 W47S29 FOP= S15 E13 N15 W13$ E27 FOP= S15 E20 N15 W20$ E20 $ S50 W50$ PTR= N30 E70 UOP= E27 N6 UDG= N24 UOP= N6 W27 S6 E27$ W27 S24 E27$ W27 S6$ S30 W70$ PTR= E80 S30 UUS= N12 W27 S12 E27$ W80 N30$.

EXTRA FEATURES

LN	OB/XF CODE	DESCRIPTION	BLD	CAP	L	W	UNITS	UT	Adj R	ADJ UNIT PRICE	ORIG COND	YEAR ON	YEAR ACTUAL	Q	% COND	OB/XF MKT VALUE	NOTES
1	0280	POOL R/CON	0	100	17	33	561.00	UT	35.00	35.00	100	1993	1993	3	40	7,854	
2	0169	FENCE/WOOD	0	100	0	0	1.00	UT	0.00	0.00	100	1993	1993	3	100	778	
3	0166	CONC,PAVMT	0	100	0	0	1.00	UT	0.00	0.00	100	1993	1993	3	100	8,966	

LAND DESCRIPTION

TOTAL OB/XF 17,598

LN	USE CODE	CLS	LAND USE DESCRIPTION	CAP	RD	LOC ZONE	FRONT	DEPTH	TOT LND UTS	UNIT TYPE	DT	DPTH FACT	% COND	TOT ADJ	UNIT PRICE	ADJ UNIT PRICE	LAND VALUE	OTHER ADJUSTMENTS AND NOTES	YEAR	DENSITY	DECL	FRZ	YR	CONSRV
1	0100	C	SFR	100		A-1	0.00	0.00	2.31	AC		1.00	1.00	0.80	18,000.00	14,400.00	33,264							

REVIEW DATE 08/06/2019 BY BC Total Acres: 2.31 Total Land Value: 33,264 Market: 0 Agricultural: 0 Common: 33,264 PRINTED 11/17/2025 BY SYS