COMM SE COR OF LOT 4 SOUTHWOOD
ACRES UNIT ONE, RUN W 109.61
FT FOR POB, CONT W 398.18 FT

VANN MARC A JR/VANN HEATHER ANN
310 SW BELLMONT DR
LAKE CITY, FL 32024

2026

36-4S-16-03359-001

COLUMBIA COUNTY PROPERTY

BUILDING CHARACTERISTICS

ELEMENT	CD	CONSTRUCTION
Exterior Wall	19	COMMON BRK 80
Exterior Wall	32	HARDIE BRD 20
Roof Structur	03	GABLE/HIP 100
Roof Cover	03	COMP SHNGL 100
Interior Wall	05	DRYWALL 100
Interior Floo	14	CARPET 80
Interior Floo	11	CLAY TILE 20
Air Condition	03	CENTRAL 100
Heating Type	04	AIR DUCTED 100
Bedrooms		3 100
Bathrooms		3 100
Frame	01	NONE 100
Stories	2.	2. 100
Architectual	05	CONV 100
Units		0 100
Condition Adj	03	03 100
Kitchen Adjus	01	01 100
Quality	07	07
DOR CODE	0100	SINGLE FAMILY
MAP NUM		MKT AREA 01
NEIGHBORHOOD/LOC	36416.010	1.00/

AREA TYPE	TOTAL GROSS AREA	PCT OF BASE	YEAR	TOT ADJ AREA	SUBAREA MARKET VALUE
BAS	1,295	100		1,295	126,630
FOP	32	30		10	978
FOP	156	30		47	4,596
FUS	1,324	100		1,324	129,466
PTO	514	5		26	2,543
SFB	460	80		368	35,984
TOTALS	3,781			3,070	300,197

MARKET ADJUSTMENTS

TYPE	MDL	EFF. AREA	TOT ADJ PTS	EFF. BASE RATE	REPL. COST NEW	AYB	EYB	ECON	FNCT		NORM	% COND
0100	01	3,070	128.3921	143.80	441,466	1993	1993	0	0	0	32.00	68.00

1 SINGLE FAM 100% - 2021 Heated Area: 3079 HX Base Yr 2021

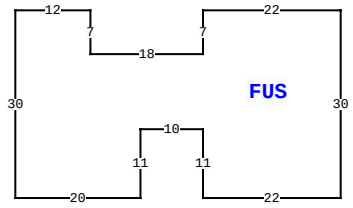

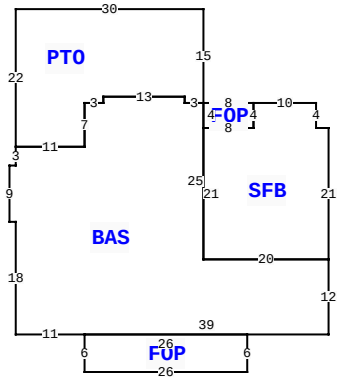

310 SW BELLMONT DR, LAKE CITY

BLD DATE		LGL DATE	
XF DATE		LAND DATE	04/07/2025 MLU
INC DATE		AG DATE	

VALUATION SUMMARY

VALUATION BY		STANDARD
Tax Group: 3	Tax Dist:	
BUILDING MARKET VALUE		300,197
TOTAL MARKET OB/XF VALUE		31,865
TOTAL LAND VALUE - MARKET		28,800
TOTAL MARKET VALUE		360,862
SOH/AGL Deduction		125,906
ASSESSED VALUE		234,956
TOTAL EXEMPTION VALUE	HX HB	50,722
BASE TAXABLE VALUE		184,234
TOTAL JUST VALUE		360,862
NCON VALUE		0
INCOME VALUE		
PREVIOUS YEAR MKT VALUE		365,277

SALE:1:1: PART OF LOT 4, BLK C SOUTHWOOD ACRES UNI

PERMIT NUM	DESCRIPTION	AMT	ISSUED
5964	SFR	66,000	04/24/1992

SALES DATA

OFF RECORD Number	DATE	TYPE INST	Q U	V I	RSN CD	SALE PRICE
1404/1438	1/27/2020	WD	U	I	12	325,000
GRANTOR:MIDFLORIDA CREDIT UNI						
GRANTEE:MARC A JR & HEATHER						
1387/0646	6/05/2019	CT	U	I	18	100
GRANTOR:CLERK OF COURT						
GRANTEE:MIDFLORIDA CREDIT U						

BUILDING NOTES

BUILDING DIMENSIONS

BAS= W13 S1 W3 S7 W11 S3 W1 S9 E1 S18 E11 FOP= S6 E26 N6W26$ E39 N12 SFB= N21 W2 N4 W10 FOP= W8 S4 E8 N4$ S4 W8 S21 E20$W20 N25 PTO= N15 W30 S22 E11 N7 E3 N1 E13 S1 E3 $ W3 N1$ PTR=N30 FUS= N30 W22 S7 W18 N7 W12 S30 E20 N11 E10 S11 E22$ S30$.

EXTRA FEATURES

LN	OB/XF CODE	DESCRIPTION	BLD	CAP	L	W	UNITS	UT	Adj R	ADJ UNIT PRICE	ORIG COND	YEAR ON	YEAR ACTUAL	Q	% COND	OB/XF MKT VALUE	NOTES
1	0170	FPLC 2STRY	0	100	0	0	1.00	UT	2,750.00	2,750.00	100	0	0	3	100	2,750	
2	0021	BARN,FR AE	0	100	0	0	1,144.00	UT	11.00	11.00	60	1997	1997	3	60	7,550	
3	0166	CONC,PAVMT	0	100	10	22	220.00	UT	2.00	2.00	100	1997	1997	3	100	440	
4	0262	PRCH,FOP	0	100	6	60	360.00	UT	10.00	10.00	100	2009	2009	3	100	3,600	
5	0166	CONC,PAVMT	0	100	0	0	7,789.00	UT	2.25	2.25	100	2009	2009	3	100	17,525	

LAND DESCRIPTION

TOTAL OB/XF 31,865

LN	USE CODE	CLS	LAND USE DESCRIPTION	CAP	RD	LOC ZONE	FRONT	DEPTH	TOT LND UTS	UNIT TYPE	DT	DPTH FACT	% COND	TOT ADJ	UNIT PRICE	ADJ UNIT PRICE	LAND VALUE	OTHER ADJUSTMENTS AND NOTES	YEAR	DENSITY	DECL	FRZ	YR	CONSRV
1	0100	C	SFR	100		A-1	0.00	0.00	1.60	AC		1.00	1.00	1.00	18,000.00	18,000.00	28,800							

REVIEW DATE 08/06/2019 BY BC Total Acres: 1.60 Total Land Value: 28,800 Market: 0 Agricultural: 0 Common: 28,800 PRINTED 11/13/2025 BY SYS