COMM NE COR, RUN S 1673.26 FT, W 400 FT FOR POB, CONT W 275 FT, N 485.65 FT, E 150 FT, N

HUDSON WAYNE T JR
387 SW EUPHORIA GLN
LAKE CITY, FL 32024

2026

36-4S-16-03299-009

COLUMBIA COUNTY PROPERTY

BUILDING CHARACTERISTICS

ELEMENT	CD	CONSTRUCTION
Exterior Wall	05	AVERAGE 100
Roof Structur	03	GABLE/HIP 100
Roof Cover	14	PREFIN MT 100
Interior Wall	05	DRYWALL 100
Interior Floo	14	CARPET 90
Interior Floo	15	HARDTILE 10
Air Condition	03	CENTRAL 100
Heating Type	04	AIR DUCTED 100
Bedrooms		3 100
Bathrooms		2 100
Frame	02	WOOD FRAME 100
Stories	1.	1. 100
Architectual	05	CONV 100
Units		0 100
Condition Adj	03	03 100
Kitchen Adjus	01	01 100
Quality	05	05
DOR CODE	0100	SINGLE FAMILY
MAP NUM		MKT AREA 01
NEIGHBORHOOD/LOC	34616.00	1.00/

AREA TYPE	TOTAL GROSS AREA	PCT OF BASE	YEAR	TOT ADJ AREA	SUBAREA MARKET VALUE
BAS	60	100		60	3,911
BAS	80	100		80	5,214
BAS	240	100		240	15,643
BAS	1,200	100		1,200	78,212
BAS	1,626	100		1,626	105,978
FOP	36	30		11	717
FOP	114	30		34	2,216
FOP	268	30		80	5,214
UGR	484	45		218	14,209
UOP	280	20		56	3,650
TOTALS	4,720			3,755	244,739

MARKET ADJUSTMENTS

TYPE	MDL	EFF. AREA	TOT ADJ PTS	EFF. BASE RATE	REPL. COST NEW	AYB	EYB	ECON	FNCT	AP	NORM	% COND
0100	01	3,755	103.4550	115.87	435,092	2002	2002	0	0	15	28.75	56.25

1 SINGLE FAM 100% - 2003 Heated Area: 3206 HX Base Yr 2003

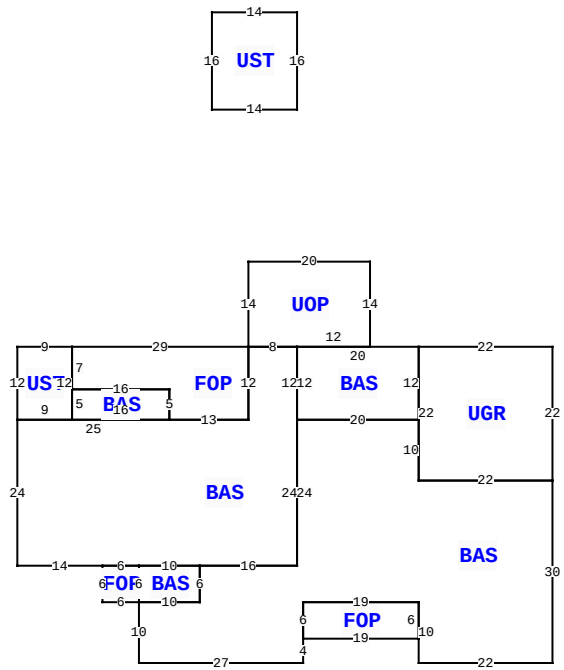

** This building has 12 Sub-Areas

387 SW EUPHORIA GLN, LAKE CITY

BLD DATE		LGL DATE	
XF DATE		LAND DATE	04/07/2025 MLU
INC DATE		AG DATE	

VALUATION SUMMARY

VALUATION BY		STANDARD
Tax Group: 3	Tax Dist:	
BUILDING MARKET VALUE		244,739
TOTAL MARKET OB/XF VALUE		6,438
TOTAL LAND VALUE - MARKET		52,580
TOTAL MARKET VALUE		303,757
SOH/AGL Deduction		90,892
ASSESSED VALUE		212,865
TOTAL EXEMPTION VALUE	HX HB	50,722
BASE TAXABLE VALUE		162,143
TOTAL JUST VALUE		303,757
NCON VALUE		0
INCOME VALUE		
PREVIOUS YEAR MKT VALUE		309,196

PERMIT NUM	DESCRIPTION	AMT	ISSUED
000053261	Roof Replacement	10,000	05/29/2025

SALES DATA

OFF RECORD Number	DATE	TYPE INST	Q U	V I	RSN CD	SALE PRICE
0950/1510	4/08/2002	WD	Q	V	01	100
GRANTOR: WAYNE T SR & GOLDIE K						
GRANTEE: WAYNE T HUDSON JR (						
0950/1509	4/08/2002	WD	Q	V	01	100
GRANTOR: WAYNE T SR & GOLDIE K						
GRANTEE: WAYNE T HUDSON JR (						

BUILDING NOTES

BUILDING DIMENSIONS

BAS= N24 BAS= E20 N12 W20 S12$ N12 UOP= E12 N14 W20 S14 E8$ W8 FOP= W29 UST= W9 S12 E9 N12$ S7 E16 S5 E13 N12$ S12 W13 BAS= N5 W16 S5 E16$ W25 S24 E14 FOP= S6 E6 N6 W6$ E6 BAS= S6 E10 N6 W10$ E10 BAS= S6 W10 S10 E27 N4 FOP= E19 N6 W19 S6$ N6 E19 S10 E22 N30 UGR= N22 W22 S22 E22$ W22 N10 W20 S24 W16$ E16$ PTR= N75 UST= N16 W14 S16 E14$ S75$.

EXTRA FEATURES

LN	OB/XF CODE	DESCRIPTION	BLD	CAP	L	W	UNITS	UT	Adj R	ADJ UNIT PRICE	ORIG COND	YEAR ON	YEAR ACTUAL	Q	% COND	OB/XF MKT VALUE	NOTES
1	0166	CONC,PAVMT	0	100	0	0	219.00	UT	2.00	2.00	100	2002	2002	3	100	438	
2	0294	SHED WOOD/	0	100	0	0	1.00	UT	0.00	0.00	100	2019	2019	3	100	3,500	
3	0120	CLFENCE 4	0	100	0	0	1.00	UT	0.00	0.00	100	2019	2019	3	100	1,500	
4	0166	CONC,PAVMT	0	100	0	0	1.00	UT	0.00	0.00	100	2019	2019	3	100	1,000	

LAND DESCRIPTION

TOTAL OB/XF 6,438

LN	USE CODE	CLS	LAND USE DESCRIPTION	CAP	RD	LOC ZONE	FRONT	DEPTH	TOT LND UTS	UNIT TYPE	DT	DPTH FACT	% COND	TOT ADJ	UNIT PRICE	ADJ UNIT PRICE	LAND VALUE	OTHER ADJUSTMENTS AND NOTES	YEAR	DENSITY	DECL	FRZ	YR	CONSRV
1	0100	C	SFR	100		A-1	0.00	0.00	4.78	AC		1.00	1.00	1.00	11,000.00	11,000.00	52,580							

REVIEW DATE 06/30/2025 BY chuck Total Acres: 4.78 Total Land Value: 52,580 Market: 0 Agricultural: 0 Common: 52,580 PRINTED 11/07/2025 BY SYS