THE W1/2 OF THE FOLLOWING:
COMM NE COR OF NW1/4 OF NE1/4, W
POB, S 1311.80 FT TO S LINE OF N

KIRBY FLETCHER/KIRBY TERRI C
P O BOX 567
LAKE CITY, FL 32056-0567

2026

36-3S-16-02611-206

COLUMBIA COUNTY PROPERTY

BUILDING CHARACTERISTICS

ELEMENT	CD	CONSTRUCTION
Exterior Wall	19	COMMON BRK 100
Roof Structur	08	IRREGULAR 100
Roof Cover	03	COMP SHNGL 100
Interior Wall	05	DRYWALL 100
Interior Floo	14	CARPET 80
Interior Floo	15	HARDTILE 20
Air Condition	03	CENTRAL 100
Heating Type	04	AIR DUCTED 100
Bedrooms		3 100
Bathrooms		4 100
Frame	02	WOOD FRAME 100
Stories	1.5	1.5 100
Architectual	05	CONV 100
Units		0 100
Condition Adj	03	03 100
Kitchen Adjus	01	01 100
Quality	07	07
DOR CODE	0100	SINGLE FAMILY
MAP NUM		MKT AREA 06
NEIGHBORHOOD/LOC	36316.00	1.00/

AREA TYPE	TOTAL GROSS AREA	PCT OF BASE	YEAR	TOT ADJ AREA	SUBAREA MARKET VALUE
BAS	4,141	100		4,141	469,316
FGR	1,064	55		585	66,301
FOP	167	30		50	5,667
FSP	587	40		235	26,634
FUS	876	100		876	99,281
TOTALS	6,835			5,887	667,197

MARKET ADJUSTMENTS

TYPE	MDL	EFF. AREA	TOT ADJ PTS	EFF. BASE RATE	REPL. COST NEW	AYB	EYB	ECON	FNCT		NORM	% COND
0100	01	5,887	129.7365	145.30	855,381	2003	2003	0	0	0	22.00	78.00

1 SINGLE FAM 100% - 2004 Heated Area: 5017 HX Base Yr 2004

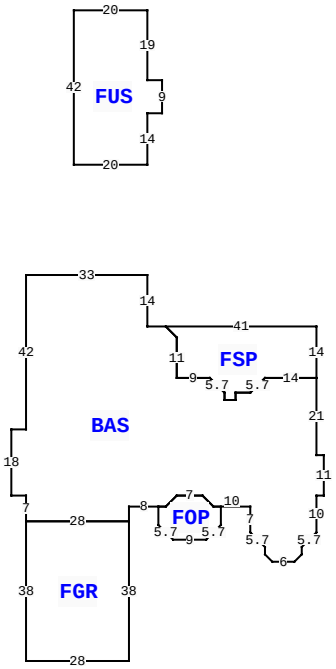

VALUATION SUMMARY		
VALUATION BY		STANDARD
Tax Group: 2	Tax Dist:	
BUILDING MARKET VALUE		667,197
TOTAL MARKET OB/XF VALUE		47,620
TOTAL LAND VALUE - MARKET		44,720
TOTAL MARKET VALUE		759,537
SOH/AGL Deduction		221,770
ASSESSED VALUE		537,767
TOTAL EXEMPTION VALUE	HX HB	50,722
BASE TAXABLE VALUE		487,045
TOTAL JUST VALUE		759,537
NCON VALUE		0
INCOME VALUE		
PREVIOUS YEAR MKT VALUE		769,586

PERMIT NUM	DESCRIPTION	AMT	ISSUED
20155	POOL	175	11/18/2002
19450	SFR	681	04/19/2002

SALES DATA

OFF RECORD Number	DATE	TYPE INST	Q U	V I	RSN CD	SALE PRICE
0881/0092	5/21/1999	WD	Q	V		43,800

GRANTOR: JERRY * MARYDELL PHIL
GRANTEE: FLETCHER & TERRI KI

BLD DATE		LGL DATE	
XF DATE		LAND DATE	04/10/2025 MLU
INC DATE		AG DATE	

BUILDING NOTES

BUILDING DIMENSIONS

BAS= W33 S42 W4 S18 E4 S7 FGR= S38 E28 N38 W28$ E28 N4 E8 FOP= S5 D4 R4 E9 R4 U4 N5 W2 U3 L3 W7 L3 D3 W2$ E2 U3 R3 E7 R3 D3 E10 S7 D4 R4 S2 D2 R2 E6 R2 U2 N2 R4 U4 N10 E2 N11 W2 N21 FSP= N14 W41 D3 R3 S11 E9 D4 R4 S2 E3 N2 E4 R4 U4 E14$ W14 D4 L4 W4 S2 W3 N2 L4 U4 W9 N11 L3 U3 W5 N14$ PTR= N30 FUS= N14 E4 N9 W4 N19 W20 S42 E20$ S30$.

EXTRA FEATURES

LN	OB/XF CODE	DESCRIPTION	BLD	CAP	L	W	UNITS	UT	Adj R	ADJ UNIT PRICE	ORIG COND	YEAR ON	YEAR ACTUAL	Q	% COND	OB/XF MKT VALUE	NOTES
1	0190	FPLC PF	0	100	0	0	1.00	UT	1,200.00	1,200.00	100	2003	2003	3	100	1,200	
2	0166	CONC,PAVMT	0	100	0	0	7,592.00	UT	2.00	2.00	100	2003	2003	3	100	15,184	
3	0280	POOL R/CON	0	100	0	0	712.00	UT	70.00	70.00	100	2003	2003	3	40	19,936	
4	0282	POOL ENCL	0	100	40	45	1,800.00	UT	15.00	15.00	100	2003	2003	3	40	10,800	
5	0260	PAVEMENT-A	0	100	0	0	1.00	UT	0.00	0.00	100	2009	2009	3	100	500	

LAND DESCRIPTION

TOTAL OB/XF 47,620

LN	USE CODE	CLS	LAND USE DESCRIPTION	CAP	RD	LOC ZONE	FRONT	DEPTH	TOT LND UTS	UNIT TYPE	DT	DPTH FACT	% COND	TOT ADJ	UNIT PRICE	ADJ UNIT PRICE	LAND VALUE	OTHER ADJUSTMENTS AND NOTES	YEAR	DENSITY	DECL	FRZ	YR	CONSRV
1	0100	C	SFR	100		A-1	0.00	0.00	6.88	AC		1.00	1.00	1.00	6,500.00	6,500.00	44,720							

REVIEW DATE 07/11/2023 BY KS Total Acres: 6.88 Total Land Value: 44,720 Market: 0 Agricultural: 0 Common: 44,720 PRINTED 11/05/2025 BY SYS