COMM SE COR OF W1/2 OF SW1/4,
RUN N 805.67 FT TO N R/W
US-90, W ALONG R/W 875.61 FT,

JENNINGS BRYANT D/JENNINGS ANGELA R
203 NW SPRING HILL CT
LAKE CITY, FL 32055

2026

36-3S-16-02611-012

COLUMBIA COUNTY PROPERTY

BUILDING CHARACTERISTICS

ELEMENT	CD	CONSTRUCTION
Exterior Wall	16	WD FR STUC 100
Roof Structur	04	WOOD TRUSS 100
Roof Cover	04	BUILT-UP 100
Interior Wall	05	DRYWALL 100
Interior Floo	11	CLAY TILE 80
Interior Floo	14	CARPET 20
Ceiling	01	FIN.SUSPD 100
Air Condition	08	ENG SPLIT 100
Heating Type	09	ENG F AIR 100
Fixtures		10 100
Frame	02	WOOD FRAME 100
Story Height		14 100
RMS		0 100
Stories	1.	1. 100
Units		0 100
Condition Adj	03	03 100
Quality	05	05
DOR CODE	1100	STORES/1 STORY
MAP NUM		MKT AREA 06
NEIGHBORHOOD/LOC	36316.00	1.00/

AREA TYPE	TOTAL GROSS AREA	PCT OF BASE	YEAR	TOT ADJ AREA	SUBAREA MARKET VALUE
BAS	1,149	100		1,149	46,316
BAS	2,458	100		2,458	99,082
TOTALS	3,607			3,607	145,398

MARKET ADJUSTMENTS

TYPE	MDL	EFF. AREA	TOT ADJ PTS	EFF. BASE RATE	REPL. COST NEW	AYB	EYB	ECON	FNCT		NORM	% COND
3500	04	3,607	110.3130	69.50	250,686	1996	1996	0	0	0	42.00	58.00

1 STORE RETL 0% - 0 Heated Area: 3607 HX Base Yr

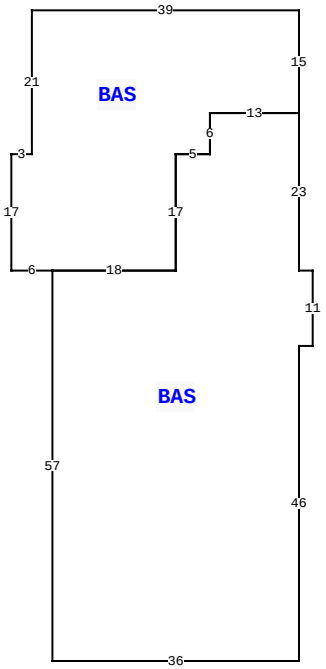

3585 NW BASCOM NORRIS DR, LAKE CITY

BLD DATE		LGL DATE	
XF DATE		LAND DATE	04/09/2024 MLU
INC DATE		AG DATE	

VALUATION SUMMARY

VALUATION BY	STANDARD
Tax Group: 1	Tax Dist:
BUILDING MARKET VALUE	164,684
TOTAL MARKET OB/XF VALUE	44,116
TOTAL LAND VALUE - MARKET	338,024
TOTAL MARKET VALUE	546,824
SOH/AGL Deduction	0
ASSESSED VALUE	546,824
TOTAL EXEMPTION VALUE	0
BASE TAXABLE VALUE	546,824
TOTAL JUST VALUE	546,824
NCON VALUE	0
INCOME VALUE	
PREVIOUS YEAR MKT VALUE	552,352

PERMIT NUM	DESCRIPTION	AMT	ISSUED
16-1279	REMODEL	0	12/01/2016
696	COMMERCIAL	1,086	04/19/1996

SALES DATA

OFF RECORD Number	DATE	TYPE INST	Q / U	V / I	RSN CD	SALE PRICE
1240/0063	8/08/2012	WD	Q	I	01	500,000
GRANTOR: ACTION IRRIGATION & L						
GRANTEE: BRYANT & ANGELA JEN						
0948/2461	3/11/2002	WD	Q	I		625,000
GRANTOR: RMS FAMILY RESTAURANT						
GRANTEE: ACTION IRRIGATION &						

BUILDING NOTES

BUILDING DIMENSIONS

BAS= W39 S21 W3 S17 E6 BAS= S57 E36 N46 E2 N11 W2 N23 W13 S6 W5 S17 W18$ E18 N17 E5 N6 E13 N15$.

EXTRA FEATURES

LN	OB/XF CODE	DESCRIPTION	BLD	CAP	L	W	UNITS	UT	Adj R	ADJ UNIT PRICE	ORIG COND	YEAR ON	YEAR ACTUAL	Q	% COND	OB/XF MKT VALUE	NOTES
1	0253	LIGHTING	0	0	0	0	4.00	UT	1,000.00	1,000.00	100	1996	1996	3	100	4,000	
2	0166	CONC,PAVMT	0	0	0	0	1,706.00	UT	2.00	2.00	100	1996	1996	3	100	3,412	
3	0260	PAVEMENT-A	0	0	0	0	30,640.00	UT	1.10	1.10	100	1996	1996	3	100	33,704	
4	0297	SHED CONCR	0	0	0	0	1.00	UT	0.00	0.00	100	2017	2017	3	100	3,000	

LAND DESCRIPTION

TOTAL OB/XF 44,116

LN	USE CODE	CLS	LAND USE DESCRIPTION	CAP	RD	LOC ZONE	FRONT	DEPTH	TOT LND UTS	UNIT TYPE	DT	DPTH FACT	% COND	TOT ADJ	UNIT PRICE	ADJ UNIT PRICE	LAND VALUE	OTHER ADJUSTMENTS AND NOTES	YEAR	DENSITY	DECL	FRZ	YR	CONSRV
1	1100	C	STORE 1FLR	0		00	0.00	0.00	42,253.00	SF		1.00	1.00	1.00	8.00	8.00	338,024							

REVIEW DATE 07/11/2023 BY KS Total Acres: 0.97 Total Land Value: 338,024 Market: 0 Agricultural: 0 Common: 338,024 PRINTED 11/17/2025 BY SYS

COMM SE COR OF W1/2 OF SW1/4,
RUN N 805.67 FT TO N R/W
US-90, W ALONG R/W 875.61 FT,

JENNINGS BRYANT D/JENNINGS ANGELA R
203 NW SPRING HILL CT
LAKE CITY, FL 32055

2026

36-3S-16-02611-012

COLUMBIA COUNTY PROPERTY

BUILDING CHARACTERISTICS

ELEMENT	CD	CONSTRUCTION
Exterior Wall	16	WD FR STUC 100
Roof Structur	09	RIDGE FRME 100
Roof Cover	04	BUILT-UP 100
Interior Wall	05	DRYWALL 100
Interior Floo	14	CARPET 90
Interior Floo	07	CORK/VTILE 10
Ceiling	01	FIN.SUSPD 100
Air Condition	06	ENG CENTRL 100
Heating Type	09	ENG F AIR 100
Fixtures		2 100
Frame	02	WOOD FRAME 100
Story Height		10 100
RMS		2 100
Stories	1.	1. 100
Units		0 100
Condition Adj	03	03 100
Quality	07	07
DOR CODE	1100	STORES/1 STORY
MAP NUM		MKT AREA 06
NEIGHBORHOOD/LOC	36316.00	1.00/

AREA TYPE	TOTAL GROSS AREA	PCT OF BASE	YEAR	TOT ADJ AREA	SUBAREA MARKET VALUE
BAS	330	100		330	19,286
TOTALS	330			330	19,286

MARKET ADJUSTMENTS

TYPE	MDL	EFF. AREA	TOT ADJ PTS	EFF. BASE RATE	REPL. COST NEW	AYB	EYB	ECON	FNCT		NORM	% COND
3500	04	330	123.6816	77.92	25,714	2004	2004	0	0	0	25.00	75.00

2 STORE RETL 0% - 0 Heated Area: 330 HX Base Yr

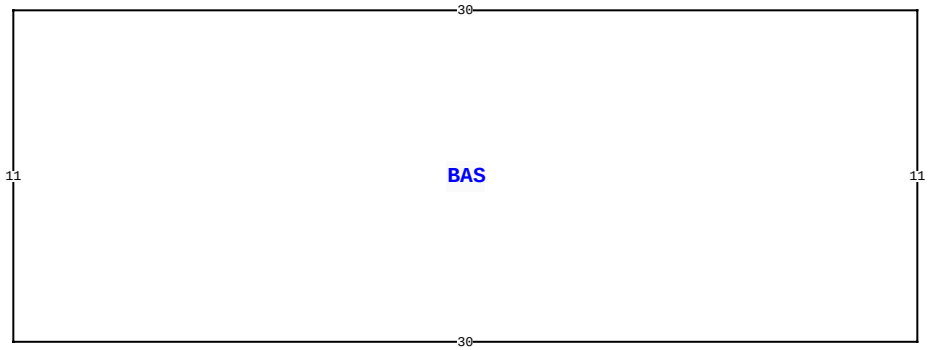

3585 NW BASCOM NORRIS DR, LAKE CITY

BLD DATE		LGL DATE	
XF DATE		LAND DATE	04/09/2024 MLU
INC DATE		AG DATE	

VALUATION SUMMARY

VALUATION BY	STANDARD
Tax Group: 1	Tax Dist:
BUILDING MARKET VALUE	164,684
TOTAL MARKET OB/XF VALUE	44,116
TOTAL LAND VALUE - MARKET	338,024
TOTAL MARKET VALUE	546,824
SOH/AGL Deduction	0
ASSESSED VALUE	546,824
TOTAL EXEMPTION VALUE	0
BASE TAXABLE VALUE	546,824
TOTAL JUST VALUE	546,824
NCON VALUE	0
INCOME VALUE	
PREVIOUS YEAR MKT VALUE	552,352

PERMIT NUM	DESCRIPTION	AMT	ISSUED

SALES DATA

OFF RECORD Number	DATE	TYPE INST	Q / U	V / I	RSN CD	SALE PRICE
1240/0063	8/08/2012	WD	Q	I	01	500,000
GRANTOR: ACTION IRRIGATION & L						
GRANTEE: BRYANT & ANGELA JEN						
0948/2461	3/11/2002	WD	Q	I		625,000
GRANTOR: RMS FAMILY RESTAURANT						
GRANTEE: ACTION IRRIGATION &						

BUILDING NOTES

BUILDING DIMENSIONS

BAS= W30 S11 E30 N11$.

EXTRA FEATURES

L N	OB/XF CODE	DESCRIPTION	BLD	CAP	L	W	UNITS	UT	Adj R	ADJ UNIT PRICE	ORIG COND	YEAR ON	YEAR ACTUAL	Q	% COND	OB/XF MKT VALUE	NOTES

LAND DESCRIPTION

TOTAL OB/XF 0

L N	USE CODE	CLS	LAND USE DESCRIPTION	CAP	R D	LOC ZONE	FRONT	DEPTH	TOT LND UTS	UNIT TYPE	D T	DPTH FACT	% COND	TOT ADJ	UNIT PRICE	ADJ UNIT PRICE	LAND VALUE	OTHER ADJUSTMENTS AND NOTES	YEAR	DENSITY	DECL	FRZ	YR	CONSRV

REVIEW DATE 07/11/2023 BY KS Total Acres: 0.97 Total Land Value: 338,024 Market: 0 Agricultural: 0 Common: 338,024 PRINTED 11/17/2025 BY SYS