COMM SE COR OF NE1/4, RUN N 1325
OF SE1/4 OF NE1/4, RUN W 1214.09
CONT W 860.43 FT, S 5 DGW 491.40

MOSES PHILIP J JR/MOSES SARAI C
4641 WEST US HIGHWAY 90
LAKE CITY, FL 32055

2026

36-3S-16-02598-001

COLUMBIA COUNTY PROPERTY

BUILDING CHARACTERISTICS

ELEMENT	CD	CONSTRUCTION
Exterior Wall	17	MSNRY STUC 100
Exterior Wall	00	N/A 0
Roof Structur	08	IRREGULAR 100
Roof Cover	03	COMP SHNGL 100
Interior Wall	05	DRYWALL 100
Interior Floo	15	HARDTILE 100
Interior Floo	00	N/A 0
Air Condition	03	CENTRAL 100
Heating Type	04	AIR DUCTED 100
Bedrooms		3 100
Bathrooms		2.5 100
Frame	03	MASONRY 100
Stories	0	0 100
Units		0 100
Condition Adj	03	03 100
Kitchen Adjus	01	01 100
Quality	09	09
DOR CODE	0100	SINGLE FAMILY
MAP NUM		MKT AREA 06
NEIGHBORHOOD/LOC	36316.00	1.00/

AREA TYPE	TOTAL GROSS AREA	PCT OF BASE	YEAR	TOT ADJ AREA	SUBAREA MARKET VALUE
BAS	2,979	100		2,979	475,647
FGR	208	55		114	18,202
FGR	978	55		538	85,901
FOP	412	30		124	19,799
FOP	465	30		140	22,354
PTO	192	5		10	1,597
TOTALS	5,234			3,905	623,497

MARKET ADJUSTMENTS

TYPE	MDL	EFF. AREA	TOT ADJ PTS	EFF. BASE RATE	REPL. COST NEW	AYB	EYB	ECON	FNCT		NORM	% COND
0100	01	3,905	150.0590	168.07	656,313	2020	2020	0	0	0	5.00	95.00

1 SINGLE FAM 100% - 2021 Heated Area: 2979 HX Base Yr 2021

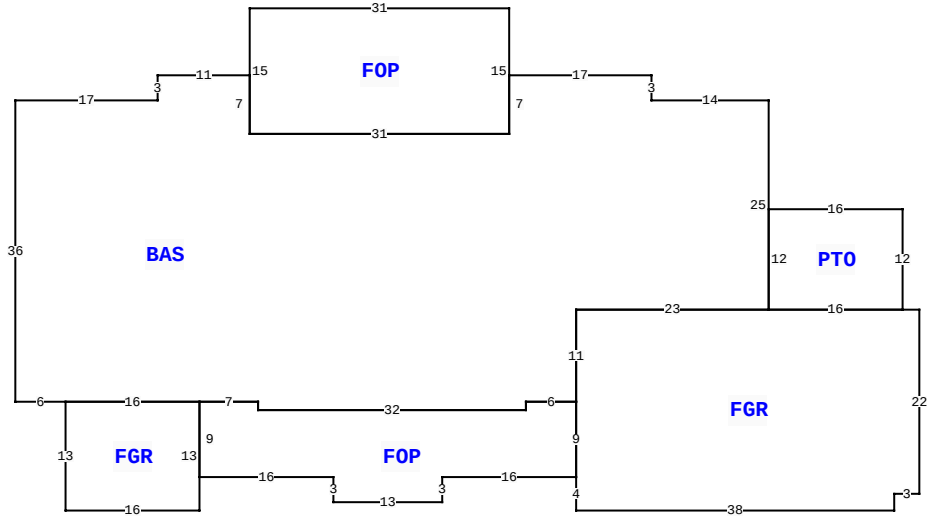

569 NW HACKNEY TER, LAKE CITY

BLD DATE		LGL DATE	
XF DATE		LAND DATE	04/09/2025 MLU
INC DATE		AG DATE	

VALUATION SUMMARY

VALUATION BY		STANDARD
Tax Group: 2	Tax Dist:	
BUILDING MARKET VALUE		623,497
TOTAL MARKET OB/XF VALUE		5,575
TOTAL LAND VALUE - MARKET		70,875
TOTAL MARKET VALUE		699,947
SOH/AGL Deduction		179,257
ASSESSED VALUE		520,690
TOTAL EXEMPTION VALUE	HX HB	50,722
BASE TAXABLE VALUE		469,968
TOTAL JUST VALUE		699,947
NCON VALUE		0
INCOME VALUE		
PREVIOUS YEAR MKT VALUE		706,510

PERMIT NUM	DESCRIPTION	AMT	ISSUED
37783	SFR	1,706	02/22/2019

SALES DATA

OFF RECORD Number	DATE	TYPE INST	Q / U	V / I	RSN CD	SALE PRICE
1358/1065	3/27/2018	WD	Q	V	01	62,000
GRANTOR: CLARENCE E BROWN III						
GRANTEE: PHILIP J MOSES JR &						
1330/0797	1/26/2017	PR	U	V	18	100
GRANTOR: CLARENCE E III & THOM						
GRANTEE: CLARENCE E BROWN II						

BUILDING NOTES

BUILDING DIMENSIONS

BAS=[ORIG=30,-20] W14 N3 W17 S7 W31 N7 W11 S3 W17 S36 E6 E16 E7 S1 E32 N1 E6 N11 E23 N25 $
FGR=[ORIG=48,5] W2 W16 W23 S11 S9 S4 E38 N2 E3 N22 $
FOP=[ORIG=-32,-31] E31 S15 W31 N15 $
FOP=[ORIG=7,16] W6 S1 W32 N1 W7 S9 E16 S3 E13 N3 E16 N9 $
FGR=[ORIG=-54,16] E16 S13 W16 N13 $
PTO=[ORIG=30,-7] E16 S12 W16 N12 $
.

EXTRA FEATURES

LN	OB/XF CODE	DESCRIPTION	BLD	CAP	L	W	UNITS	UT	Adj R	ADJ UNIT PRICE	ORIG COND	YEAR ON	YEAR ACTUAL	Q	% COND	OB/XF MKT VALUE	NOTES
1	0190	FPLC PF	0	100	0	0	1.00	UT	1,200.00	1,200.00	100	2021	2020		100	1,200	
2	0166	CONC,PAVMT	0	100	0	0	1,750.00	UT	2.50	2.50	100	2021	2020		100	4,375	

LAND DESCRIPTION

TOTAL OB/XF 5,575

LN	USE CODE	CLS	LAND USE DESCRIPTION	CAP	RD	LOC ZONE	FRONT	DEPTH	TOT LND UTS	UNIT TYPE	DT	DPTH FACT	% COND	TOT ADJ	UNIT PRICE	ADJ UNIT PRICE	LAND VALUE	OTHER ADJUSTMENTS AND NOTES	YEAR	DENSITY	DECL	FRZ	YR	CONSRV
1	0100	C	SFR	100		A-1	0.00	0.00	11.25	AC		1.00	1.00	0.90	7,000.00	6,300.00	70,875							

REVIEW DATE 06/28/2023 BY KS Total Acres: 11.25 Total Land Value: 70,875 Market: 0 Agricultural: 0 Common: 70,875 PRINTED 11/17/2025 BY SYS