BEG NE COR OF SE1/4 OF NW1/4, RU
S 86 DEG W 192 FT, S 78 DEG W 14
N 86 DEG W 191.80 FT, N 7 DEG W

CHEATHAM TERESA L
188 NE OSBURN WAY
LAKE CITY, FL 32055

2026

35-3S-17-07314-000

COLUMBIA COUNTY PROPERTY

BUILDING CHARACTERISTICS

ELEMENT	CD	CONSTRUCTION
Exterior Wall	04	SINGLE SID 90
Exterior Wall	32	HARDIE BRD 10
Roof Structur	03	GABLE/HIP 100
Roof Cover	12	MODULAR MT 100
Interior Wall	02	WALL BD/WD 80
Interior Wall	05	DRYWALL 20
Interior Floo	12	HARDWOOD 100
Air Condition	03	CENTRAL 100
Heating Type	04	AIR DUCTED 100
Bedrooms		2 100
Bathrooms		2 100
Frame	01	NONE 100
Stories	1.	1. 100
Architectual	05	CONV 100
Units		0 100
Condition Adj	03	03 100
Kitchen Adjus	01	01 100
Quality	05	05
DOR CODE	0100	SINGLE FAMILY
MAP NUM		MKT AREA 06
NEIGHBORHOOD/LOC	35317.00	1.00/

AREA TYPE	TOTAL GROSS AREA	PCT OF BASE	YEAR	TOT ADJ AREA	SUBAREA MARKET VALUE
BAS	144	100		144	9,550
BAS	156	100		156	10,346
BAS	360	100		360	23,875
BAS	2,208	100		2,208	146,433
FOP	552	30		166	11,009
FOP	624	30		187	12,402
UDU	861	55		474	31,435
TOTALS	4,905			3,695	245,051

MARKET ADJUSTMENTS

TYPE	MDL	EFF. AREA	TOT ADJ PTS	EFF. BASE RATE	REPL. COST NEW	AYB	EYB	ECON	FNCT		NORM	% COND
0100	01	3,695	91.1000	102.03	377,001	1939	1995	0	0	0	35.00	65.00

1 SINGLE FAM 100% - 2014 Heated Area: 2868 HX Base Yr 2014

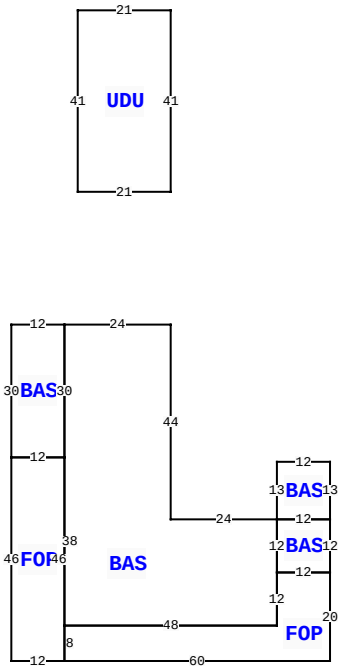

188 NE OSBURN WAY, LAKE CITY

BLD DATE		LGL DATE	
XF DATE		LAND DATE	
INC DATE		AG DATE	

VALUATION SUMMARY

VALUATION BY		STANDARD
Tax Group: 2	Tax Dist:	
BUILDING MARKET VALUE		245,051
TOTAL MARKET OB/XF VALUE		15,843
TOTAL LAND VALUE - MARKET		49,504
TOTAL MARKET VALUE		310,398
SOH/AGL Deduction		91,157
ASSESSED VALUE		219,241
TOTAL EXEMPTION VALUE	HX HB	50,722
BASE TAXABLE VALUE		168,519
TOTAL JUST VALUE		310,398
NCON VALUE		0
INCOME VALUE		
PREVIOUS YEAR MKT VALUE		310,698

PERMIT NUM	DESCRIPTION	AMT	ISSUED
000054426	Remodel	38,824	11/07/2025
41388	GENERATOR		02/23/2021
8188	RECONNECT	50	03/23/1994

SALES DATA

OFF RECORD Number	DATE	TYPE INST	Q U /	V I /	RSN CD	SALE PRICE
1407/2598	3/12/2020	QC	U	I	11	100
GRANTOR: JOEL D CHEATHAM						
GRANTEE: TERESA CHEATHAM						
1350/1668	12/17/2017	WD	U	I	11	100
GRANTOR: TERESA CHEATHAM						
GRANTEE: TERESA CHEATHAM & J						

BUILDING NOTES

BUILDING DIMENSIONS

BAS= W24 BAS= W12 S30 E12 N30$ S30 FOP= W12 S46 E12 N46$ S38 FOP= S8 E60 N20 W12 S12 W48$ E48 N12 BAS= E12 N12 W12 S12$ N12 BAS= E12 N13 W12 S13$ W24 N44$ PTR= N30 UDU= N41 W21 S41 E21$ S30$.

EXTRA FEATURES

LN	OB/XF CODE	DESCRIPTION	BLD	CAP	L	W	UNITS	UT	Adj R	ADJ UNIT PRICE	ORIG COND	YEAR ON	YEAR ACTUAL	Q	% COND	OB/XF MKT VALUE	NOTES
1	0294	SHED WOOD/	0	100	0	0	1.00	UT	0.00	0.00	100	0	0	3	100	300	
2	0070	CARPORT UF	0	100	19	30	1.00	UT	0.00	0.00	100	1993	1993	3	100	1,425	
3	9945	Well/Sept	0	0	0	0	1.00	UT	7,000.00	7,000.00	100			3	100	7,000	
4	0140	CLFENCE 6	0	100	0	0	544.00	UT	3.60	3.60	100	2001	2001	3	100	1,958	
5	0080	DECKING	0	100	11	30	330.00	UT	2.00	2.00	100	2001	2001	3	100	660	
6	0104	GENERATOR	0	100	0	0	1.00	UT	6,000.00	6,000.00	100	2022	2021		75	4,500	

LAND DESCRIPTION

TOTAL OB/XF 15,843

LN	USE CODE	CLS	LAND USE DESCRIPTION	CAP	RD	LOC ZONE	FRONT	DEPTH	TOT LND UTS	UNIT TYPE	DT	DPTH FACT	% COND	TOT ADJ	UNIT PRICE	ADJ UNIT PRICE	LAND VALUE	OTHER ADJUSTMENTS AND NOTES	YEAR	DENSITY	DECL	FRZ	YR	CONSRV
1	0100	C	SFR	100		00	0.00	0.00	4.42	AC		1.00	1.00	0.80	14,000.00	11,200.00	49,504							

REVIEW DATE 06/23/2021 BY JB Total Acres: 4.42 Total Land Value: 49,504 Market: 0 Agricultural: 0 Common: 49,504 PRINTED 11/18/2025 BY SYS