E1/2 OF SW1/4 OF NE1/4, EX APPRO
DESC ORB 643-687 & EX APPROX 11.
948-675.

FERGUSON JOY S
P O BOX 111
LAKE CITY, FL 32056

2026

35-3S-16-02585-004

COLUMBIA COUNTY PROPERTY

BUILDING CHARACTERISTICS

ELEMENT	CD	CONSTRUCTION
Exterior Wall	19	COMMON BRK 70
Exterior Wall	05	AVERAGE 30
Roof Structur	03	GABLE/HIP 100
Roof Cover	03	COMP SHNGL 100
Interior Wall	05	DRYWALL 100
Interior Floo	14	CARPET 80
Interior Floo	07	CORK/VTILE 20
Air Condition	03	CENTRAL 100
Heating Type	04	AIR DUCTED 100
Bedrooms		3 100
Bathrooms		3 100
Frame	01	NONE 100
Stories	1.	1. 100
Architectual	05	CONV 100
Units		0 100
Condition Adj	03	03 100
Kitchen Adjus	01	01 100
Quality	07	07
DOR CODE	0100	SINGLE FAMILY
MAP NUM		MKT AREA 06
NEIGHBORHOOD/LOC	35316.030	1.00/

AREA TYPE	TOTAL GROSS AREA	PCT OF BASE	YEAR	TOT ADJ AREA	SUBAREA MARKET VALUE
BAS	150	100		150	12,828
BAS	3,179	100		3,179	271,870
FGR	500	55		275	23,518
FOP	108	30		32	2,737
FOP	527	30		158	13,512
PTO	20	5		1	86
UBM	312	20		62	5,302
UBM	345	20		69	5,901
TOTALS	5,141			3,926	335,754

MARKET ADJUSTMENTS

TYPE	MDL	EFF. AREA	TOT ADJ PTS	EFF. BASE RATE	REPL. COST NEW	AYB	EYB	ECON	FNCT		NORM	% COND
0100	01	3,926	117.4767	131.57	516,544	1991	1991	0	0	0	35.00	65.00

1 SINGLE FAM 100% - 0 Heated Area: 3329 HX Base Yr

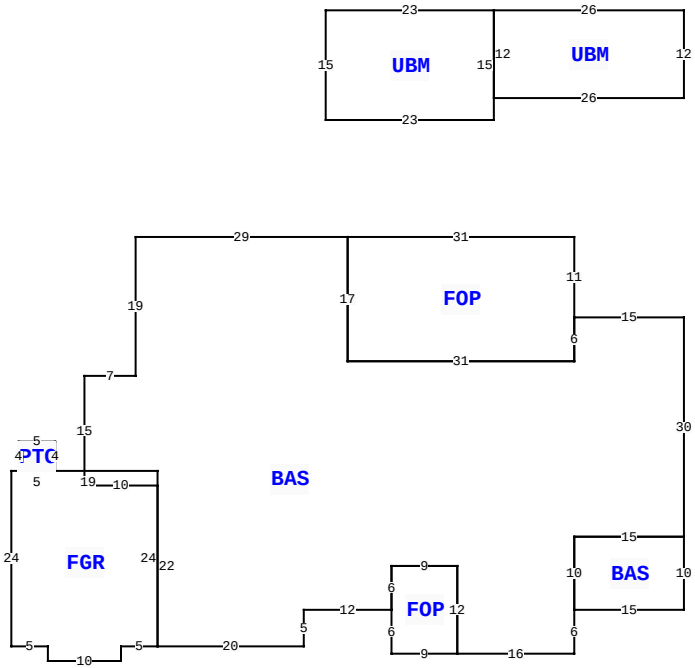

349 NW STREAMSIDE CT, LAKE CITY

BLD DATE		LGL DATE	
XF DATE		LAND DATE	
INC DATE		AG DATE	

VALUATION SUMMARY

VALUATION BY		STANDARD
Tax Group: 2	Tax Dist:	
BUILDING MARKET VALUE		335,754
TOTAL MARKET OB/XF VALUE		17,386
TOTAL LAND VALUE - MARKET		52,386
TOTAL MARKET VALUE		405,526
SOH/AGL Deduction		108,498
ASSESSED VALUE		297,028
TOTAL EXEMPTION VALUE	HX HB WX	55,722
BASE TAXABLE VALUE		241,306
TOTAL JUST VALUE		405,526
NCON VALUE		0
INCOME VALUE		
PREVIOUS YEAR MKT VALUE		405,526

LAND:1:1: 17.76 AC.

PERMIT NUM	DESCRIPTION	AMT	ISSUED

SALES DATA

OFF RECORD Number	DATE	TYPE INST	Q U	V I	RSN CD	SALE PRICE
1549/1806	9/18/2025	LE	U	I	14	100
GRANTOR: FERGUSON JOY S						
GRANTEE: FERGUSON JOY S (ENH						
0808/0437	6/06/1995	WD	Q	V	03	0
GRANTOR: DALE & JOY FERGUSON						
GRANTEE: JOY S FERGUSON						

BUILDING NOTES

BUILDING DIMENSIONS

BAS= W15 FOP= N11 W31 S17 E31 N6$ S6 W31 N17 W29 S19 W7 S15 E10 S22 FGR= W5 S2 W10 N2 W5 N24 E1 PTO= N4 E5 S4 W5$ E19 S24$ E20 N5 E12 FOP= S6E9 N12 W9 S6$ N6 E9 S12 E16 N6 BAS= E15 N10 W15 S10$ N10 E15 N30$ PTR=N30 UBM= N12 W26 UBM= W23 S15 E23 N15$ S12 E26$ S30$.

EXTRA FEATURES

LN	OB/XF CODE	DESCRIPTION	BLD	CAP	L	W	UNITS	UT	Adj R	ADJ UNIT PRICE	ORIG COND	YEAR ON	YEAR ACTUAL	Q	% COND	OB/XF MKT VALUE	NOTES
1	0258	PATIO	0	100	12	24	288.00	UT	2.50	2.50	100	1993	1993	3	100	720	
2	0166	CONC,PAVMT	0	100	0	0	8,333.00	UT	2.00	2.00	100	1993	1993	3	100	16,666	

LAND DESCRIPTION

TOTAL OB/XF 17,386

LN	USE CODE	CLS	LAND USE DESCRIPTION	CAP	RD	LOC ZONE	FRONT	DEPTH	TOT LND UTS	UNIT TYPE	DT	DPTH FACT	% COND	TOT ADJ	UNIT PRICE	ADJ UNIT PRICE	LAND VALUE	OTHER ADJUSTMENTS AND NOTES	YEAR	DENSITY	DECL	FRZ	YR	CONSRV
1	0133	C	SFR LAKE	100		RSF-1	0.00	0.00	3.49	AC		1.00	1.00	1.00	15,000.00	15,000.00	52,350							
2	9520	C	LAKE	0		00	0.00	0.00	1.42	AC		1.00	1.00	1.00	25.00	25.00	36							

REVIEW DATE 07/12/2023 BY JB Total Acres: 4.91 Total Land Value: 52,386 Market: 0 Agricultural: 0 Common: 52,386 PRINTED 11/17/2025 BY SYS