LOT 49 FAIRWAY VIEW S/D UNIT I
ORB 747-1422,842-546, 883-2481
DC 1277-1993,

WHITFIELD NANCY J
213 NW GLEASON DR APT 506
LAKE CITY, FL 32055

2026

35-3S-16-02309-049

COLUMBIA COUNTY PROPERTY

BUILDING CHARACTERISTICS

ELEMENT	CD	CONSTRUCTION
Exterior Wall	19	COMMON BRK 90
Exterior Wall	05	AVERAGE 10
Roof Structur	08	IRREGULAR 100
Roof Cover	03	COMP SHNGL 100
Interior Wall	05	DRYWALL 100
Interior Floo	14	CARPET 80
Interior Floo	08	SHT VINYL 20
Air Condition	03	CENTRAL 100
Heating Type	04	AIR DUCTED 100
Bedrooms		3 100
Bathrooms		2 100
Frame	01	NONE 100
Stories	1.	1. 100
Architectual	05	CONV 100
Units		0 100
Condition Adj	03	03 100
Kitchen Adjus	01	01 100
Quality	07	07
DOR CODE	0100	SINGLE FAMILY
MAP NUM		MKT AREA 06
NEIGHBORHOOD/LOC	26316.030	1.00/

AREA TYPE	TOTAL GROSS AREA	PCT OF BASE	YEAR	TOT ADJ AREA	SUBAREA MARKET VALUE
BAS	1,745	100		1,745	158,809
FGR	484	55		266	24,208
FOP	48	30		14	1,274
FSP	430	40		172	15,654
UDG	572	55		315	28,667
TOTALS	3,279			2,512	228,612

MARKET ADJUSTMENTS

TYPE	MDL	EFF. AREA	TOT ADJ PTS	EFF. BASE RATE	REPL. COST NEW	AYB	EYB	ECON	FNCT		NORM	% COND
0100	01	2,512	124.7246	139.69	350,901	1991	1991	0	0	0	34.85	65.15

1 SINGLE FAM 100% - 2000 Heated Area: 1745 HX Base Yr 2000

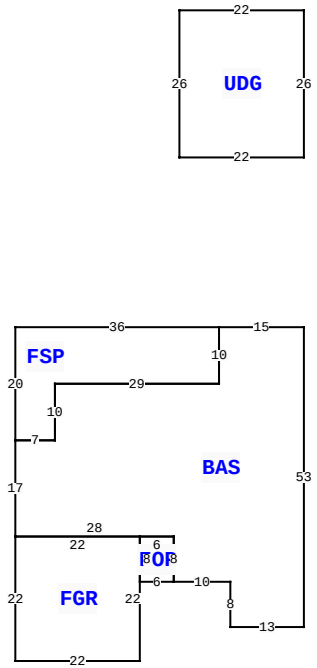

102 NW HARRIS LAKE DR, LAKE CITY

BLD DATE		LGL DATE	
XF DATE		LAND DATE	04/03/2025 MLU
INC DATE		AG DATE	

VALUATION SUMMARY

VALUATION BY		STANDARD
Tax Group: 2	Tax Dist:	
BUILDING MARKET VALUE		228,612
TOTAL MARKET OB/XF VALUE		7,422
TOTAL LAND VALUE - MARKET		42,000
TOTAL MARKET VALUE		278,034
SOH/AGL Deduction		90,205
ASSESSED VALUE		187,829
TOTAL EXEMPTION VALUE	HX HB WX SX	105,722
BASE TAXABLE VALUE		82,107
TOTAL JUST VALUE		278,034
NCON VALUE		0
INCOME VALUE		
PREVIOUS YEAR MKT VALUE		281,613

PERMIT NUM	DESCRIPTION	AMT	ISSUED
31087	MAINT/ALTR	55	05/24/2013

SALES DATA

OFF RECORD Number	DATE	TYPE INST	Q U	V I	RSN CD	SALE PRICE
0883/2481	7/06/1999	WD	Q	I		146,000
GRANTOR: TALBOTT						
GRANTEE: WHITFIELD						
0842/0546	7/11/1997	WD	Q	I		143,000
GRANTOR: D J & ROSE BENZ						
GRANTEE: JOHN & ELLEN TALBOT						

BUILDING NOTES

BUILDING DIMENSIONS

BAS= W15 FSP= W36 S20 E7 N10E29N10$ S10 W29 S10 W7 S17 FGR= S22 E22 N22 W22$ E28 S8FOP= W6 N8 E6 S8$ E10 S8 E13N53$ PTR= N30 UDG= N26 W22 S26 E22$ S30$.

EXTRA FEATURES

LN	OB/XF CODE	DESCRIPTION	BLD	CAP	L	W	UNITS	UT	Adj R	ADJ UNIT PRICE	ORIG COND	YEAR ON	YEAR ACTUAL	Q	% COND	OB/XF MKT VALUE	NOTES
1	0166	CONC,PAVMT	0	100	0	0	1,500.00	UT	1.40	1.40	100	0	0	3	100	2,100	
2	0166	CONC,PAVMT	0	100	0	0	2,661.00	UT	2.00	2.00	100	1993	1993	3	100	5,322	

LAND DESCRIPTION

TOTAL OB/XF 7,422

LN	USE CODE	CLS	LAND USE DESCRIPTION	CAP	RD	LOC ZONE	FRONT	DEPTH	TOT LND UTS	UNIT TYPE	DT	DPTH FACT	% COND	TOT ADJ	UNIT PRICE	ADJ UNIT PRICE	LAND VALUE	OTHER ADJUSTMENTS AND NOTES	YEAR	DENSITY	DECL	FRZ	YR	CONSRV
1	0140	C	SFR GOLF	100		00	0.00	0.00	1.00	LT		1.00	1.00	1.20	35,000.00	42,000.00	42,000							

REVIEW DATE 07/12/2023 BY JB Total Acres: 0.72 Total Land Value: 42,000 Market: 0 Agricultural: 0 Common: 42,000 PRINTED 11/17/2025 BY SYS