COMM NW COR OF NE1/4 OF NE1/4 SE
N 52 FT FOR POB, CONT N 118 FT,
N 664.82 FT, E 309.54 FT, S 782.

DECKER ERIC/MOORE LYDIA
312 SW TRAVER CT
FORT WHITE, FL 32038

2026

34-6S-16-04065-005

COLUMBIA COUNTY PROPERTY

BUILDING CHARACTERISTICS

ELEMENT	CD	CONSTRUCTION
Exterior Wall	32	HARDIE BRD 90
Exterior Wall	19	COMMON BRK 10
Roof Structur	03	GABLE/HIP 100
Roof Cover	03	COMP SHNGL 100
Interior Wall	05	DRYWALL 100
Interior Floo	14	CARPET 90
Interior Floo	15	HARDTILE 10
Air Condition	03	CENTRAL 100
Heating Type	04	AIR DUCTED 100
Bedrooms		3 100
Bathrooms		2 100
Frame	02	WOOD FRAME 100
Stories	1.	1. 100
Architectual	05	CONV 100
Units		0 100
Condition Adj	03	03 100
Kitchen Adjus	02	02 100
Quality	06	06
DOR CODE	0100	SINGLE FAMILY
MAP NUM		MKT AREA 02
NEIGHBORHOOD/LOC	34616.00	1.00/

AREA TYPE	TOTAL GROSS AREA	PCT OF BASE	YEAR	TOT ADJ AREA	SUBAREA MARKET VALUE
BAS	2,126	100		2,126	225,160
FGR	498	55		274	29,019
FOP	198	30		59	6,248
FSP	353	40		141	14,933
FST	273	55		150	15,887
TOTALS	3,448			2,750	291,245

MARKET ADJUSTMENTS

TYPE	MDL	EFF. AREA	TOT ADJ PTS	EFF. BASE RATE	REPL. COST NEW	AYB	EYB	ECON	FNCT		NORM	% COND
0100	01	2,750	116.7415	130.75	359,562	2006	2006	0	0	0	19.00	81.00

1 SINGLE FAM 100% - 2023 Heated Area: 2126 HX Base Yr 2023

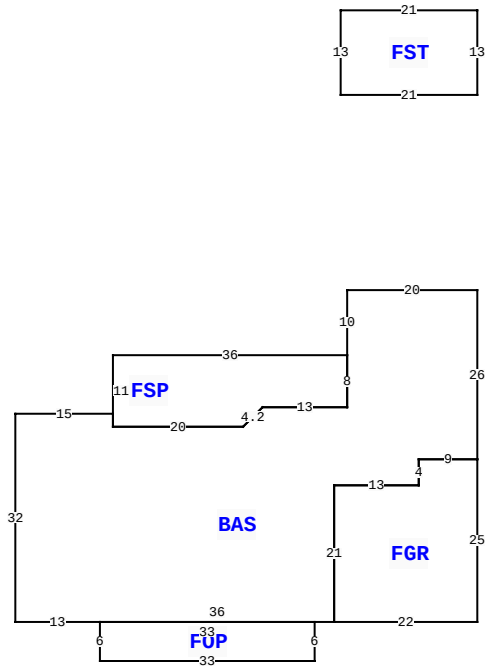

312 SW TRAVER CT, FORT WHITE

BLD DATE		LGL DATE	
XF DATE		LAND DATE	05/14/2024 MLU
INC DATE		AG DATE	

VALUATION SUMMARY

VALUATION BY		STANDARD
Tax Group: 3	Tax Dist:	
BUILDING MARKET VALUE		291,245
TOTAL MARKET OB/XF VALUE		34,132
TOTAL LAND VALUE - MARKET		50,000
TOTAL MARKET VALUE		375,377
SOH/AGL Deduction		4,406
ASSESSED VALUE		370,971
TOTAL EXEMPTION VALUE	HX HB	50,722
BASE TAXABLE VALUE		320,249
TOTAL JUST VALUE		375,377
NCON VALUE		0
INCOME VALUE		
PREVIOUS YEAR MKT VALUE		380,320

PERMIT NUM	DESCRIPTION	AMT	ISSUED
000044690	Roof Replacement	20,910	06/15/2022
31190	POOL ENCL	80	06/24/2013
30924	POOL	175	04/09/2013
24665	SFR	626	06/26/2006

SALES DATA

OFF RECORD Number	DATE	TYPE INST	Q / U	V / I	RSN CD	SALE PRICE
1481/1858	12/16/2022	WD	Q	I	01	445,000
GRANTOR: BOEHNLEIN JOSEPH						
GRANTEE: DECKER ERIC						
1481/1851	12/12/2022	QC	U	I	11	100
GRANTOR: BOEHNLEIN BRENDA						
GRANTEE: BOEHNLEIN JOSEPH						

BUILDING NOTES

BUILDING DIMENSIONS

BAS= W20 S10 FSP= W36 S11 E20 R3 U3 E13 N8$ S8 W13 D3 L3 W20 N2 W15 S32 E13 FOP= S6 E33 N6 W33$ E36 FGR= E22 N25 W9 S4 W13 S21$ N21 E13 N4 E9 N26$ PTR= N30 FST= N13 W21 S13 E21$ S30$.

EXTRA FEATURES

LN	OB/XF CODE	DESCRIPTION	BLD	CAP	L	W	UNITS	UT	Adj R	ADJ UNIT PRICE	ORIG COND	YEAR ON	YEAR ACTUAL	Q	% COND	OB/XF MKT VALUE	NOTES
1	0166	CONC,PAVMT	0	100	0	0	256.00	UT	3.00	3.00	100	2006	2006	3	100	768	
2	0080	DECKING	0	100	0	0	1.00	UT	0.00	0.00	100	2010	2010	3	100	1,800	
3	0296	SHED METAL	0	100	0	0	1.00	UT	0.00	0.00	100	2010	2010	3	100	800	
4	0280	POOL R/CON	0	100	16	30	480.00	UT	70.00	70.00	100	2013	2013	3	74	24,864	
5	0282	POOL ENCL	0	100	25	36	900.00	UT	15.00	15.00	100	2013	2013	3	40	5,400	
6	0166	CONC,PAVMT	0	100	0	0	1.00	UT	0.00	0.00	100	2015	2015	3	100	400	
7	0252	LEAN-TO W/	0	100	0	0	1.00	UT	0.00	0.00	100	2015	2015	3	100	100	

LAND DESCRIPTION

TOTAL OB/XF 34,132

LN	USE CODE	CLS	LAND USE DESCRIPTION	CAP	RD	LOC ZONE	FRONT	DEPTH	TOT LND UTS	UNIT TYPE	DT	DPTH FACT	% COND	TOT ADJ	UNIT PRICE	ADJ UNIT PRICE	LAND VALUE	OTHER ADJUSTMENTS AND NOTES	YEAR	DENSITY	DECL	FRZ	YR	CONSRV
1	0100	C	SFR	100			0.00	0.00	5.00	AC		1.00	1.00	1.00	10,000.00	10,000.00	50,000							

REVIEW DATE 01/24/2023 BY ME Total Acres: 5.00 Total Land Value: 50,000 Market: 0 Agricultural: 0 Common: 50,000 PRINTED 11/19/2025 BY SYS