LOT 37 THORNWOOD S/D

WD 1030-2804, WD 1065-2312, 1457

MAULDIN KELLY N/HANCOCK MARTY
122 SW GREENWOOD TER
FORT WHITE, FL 32038

2026

34-6S-16-04056-137

COLUMBIA COUNTY PROPERTY

BUILDING CHARACTERISTICS

ELEMENT	CD	CONSTRUCTION
Exterior Wall	17	MSNRY STUC 100
Roof Structur	03	GABLE/HIP 100
Roof Cover	14	PREFIN MT 100
Interior Wall	05	DRYWALL 100
Interior Floo	14	CARPET 90
Interior Floo	08	SHT VINYL 10
Air Condition	03	CENTRAL 100
Heating Type	04	AIR DUCTED 100
Bedrooms		5 100
Bathrooms		4 100
Frame	03	MASONRY 100
Stories	1.	1. 100
Architectual	05	CONV 100
Units		0 100
Quality	05	05

DOR CODE 0100 SINGLE FAMILY

MAP NUM | MKT AREA 02

NEIGHBORHOOD/LOC 16.00 1.00/

AREA TYPE	TOTAL GROSS AREA	PCT OF BASE	YEAR	TOT ADJ AREA	SUBAREA MARKET VALUE
BAS	2,452	100		2,452	259,493
FGR	400	55		220	23,282
FGR	552	55		304	32,172
FOP	70	30		21	2,222
FSP	84	40		34	3,598
FSP	128	40		51	5,397
FSP	226	40		90	9,524
FSP	276	40		110	11,642
MLS	908	90		817	86,462
TOTALS	5,096			4,099	433,794

MARKET ADJUSTMENTS

TYPE	MDL	EFF. AREA	TOT ADJ PTS	EFF. BASE RATE	REPL. COST NEW	AYB	EYB	ECON	FNCT		NORM	% COND
0100	01	4,099	115.2360	129.06	529,017	2007	2007	0	0	0	18.00	82.00

1 SINGLE FAM 100% - 2025 Heated Area: 3360 HX Base Yr 2025

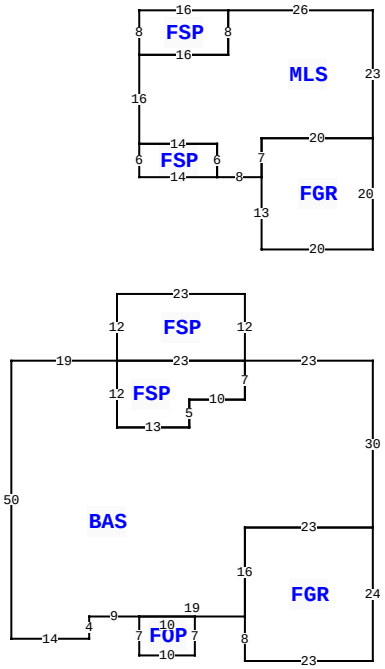

122 SW GREENWOOD TER, FORT WHITE

BLD DATE		LGL DATE	
XF DATE		LAND DATE	04/21/2023 MLU
INC DATE		AG DATE	

VALUATION SUMMARY

VALUATION BY		STANDARD
Tax Group: 4	Tax Dist:	
BUILDING MARKET VALUE		433,794
TOTAL MARKET OB/XF VALUE		15,921
TOTAL LAND VALUE - MARKET		28,000
TOTAL MARKET VALUE		477,715
SOH/AGL Deduction		0
ASSESSED VALUE		477,715
TOTAL EXEMPTION VALUE	HX HB	50,722
BASE TAXABLE VALUE		426,993
TOTAL JUST VALUE		477,715
NCON VALUE		0
INCOME VALUE		
PREVIOUS YEAR MKT VALUE		483,005

PERMIT NUM	DESCRIPTION	AMT	ISSUED
000051988	Remodel	11,048	08/21/2025
000052672	Roof Replacement	14,600	03/24/2025
30521	ADDN SFR	416	10/16/2012
25267	SFR	648	12/01/2006
24861	GARAGE	45	08/14/2006

SALES DATA

OFF RECORD Number	DATE	TYPE INST	Q U	V I	RSN CD	SALE PRICE
1524/2026	10/03/2024	WD	Q	I	01	495,000
GRANTOR: FIGUEROA ABRAHAM						
GRANTEE: MAULDIN KELLY N						
1457/1414	1/21/2022	WD	Q	I	01	430,000
GRANTOR: BOHLMANN SUSAN M						
GRANTEE: FIGUEROA ABRAHAM						

BUILDING NOTES

BUILDING DIMENSIONS

BAS=[ORIG=0,0] W23 S7 W10 S5 W13 N12 W19 S50 E14 N4 E9 E19 N16 E23 N30 $
MLS=[ORIG=0,-40] N23 W26 S8 W16 S16 E14 S6 E8 N7 E20 $
FGR=[ORIG=-23,46] S8 E23 N24 W23 S16 $
FGR=[ORIG=-20,-33] S13 E20 N20 W20 S7 $
FSP=[ORIG=-23,0] N12 W23 S12 E23 $
FSP=[ORIG=-23,0] W23 S12 E13 N5 E10 N7 $
FSP=[ORIG=-26,-63] W16 S8 E16 N8 $
FSP=[ORIG=-42,-39] S6 E14 N6 W14 $
FOP=[ORIG=-42,46] S7 E10 N7 W10 $
PTR=[ORIG=0,0] N40 S40 $
.

EXTRA FEATURES

LN	OB/XF CODE	DESCRIPTION	BLD	CAP	L	W	UNITS	UT	Adj R	ADJ UNIT PRICE	ORIG COND	YEAR ON	YEAR ACTUAL	Q	% COND	OB/XF MKT VALUE	NOTES
1	0166	CONC,PAVMT	0	100	0	0	1,167.00	UT	3.00	3.00	100	2007	2007	3	100	3,501	
2	0031	BARN,MT AE	0	100	20	30	600.00	UT	12.00	12.00	100	2007	2007	3	100	7,200	
3	0169	FENCE/WOOD	0	100	0	0	320.00	UT	10.50	10.50	100	2010	2010	3	100	3,360	
4	0166	CONC,PAVMT	0	100	0	0	530.00	UT	2.00	2.00	100	2013	2013	3	100	1,060	
5	0070	CARPORT UF	0	100	0	0	1.00	UT	800.00	800.00	100	2025	2024		100	800	

LAND DESCRIPTION

TOTAL OB/XF 15,921

LN	USE CODE	CLS	LAND USE DESCRIPTION	CAP	RD	LOC ZONE	FRONT	DEPTH	TOT LND UTS	UNIT TYPE	DT	DPTH FACT	% COND	TOT ADJ	UNIT PRICE	ADJ UNIT PRICE	LAND VALUE	OTHER ADJUSTMENTS AND NOTES	YEAR	DENSITY	DECL	FRZ	YR	CONSRV
1	0100	C	SFR	100		A-1	0.00	0.00	1.00	LT		1.00	1.00	1.00	28,000.00	28,000.00	28,000							

REVIEW DATE 04/14/2025 BY chuck Total Acres: 1.25 Total Land Value: 28,000 Market: 0 Agricultural: 0 Common: 28,000 PRINTED 11/18/2025 BY SYS