LOT 26 THORNWOOD S/D.
WD 1030-2804, WD 1226-1532, WD 1

WENTWORTH CALEB JACKSON
190 SW THISTLEWOOD LN
FORT WHITE, FL 32038

2026

34-6S-16-04056-126

COLUMBIA COUNTY PROPERTY

BUILDING CHARACTERISTICS

ELEMENT	CD	CONSTRUCTION
Exterior Wall	32	HARDIE BRD 100
Exterior Wall	00	N/A 0
Roof Structur	08	IRREGULAR 100
Roof Cover	03	COMP SHNGL 100
Interior Wall	05	DRYWALL 100
Interior Floo	00	N/A 50
Interior Floo	13	LAM/VNLPLK 50
Air Condition	03	CENTRAL 100
Heating Type	04	AIR DUCTED 100
Bedrooms		3 100
Bathrooms		2.5 100
Frame	02	WOOD FRAME 100
Stories	1.	1. 100
Units		0 100
Condition Adj	03	03 100
Kitchen Adjus	01	01 100
Quality	07	07
DOR CODE	0100	SINGLE FAMILY
MAP NUM		MKT AREA 02
NEIGHBORHOOD/LOC	16.00	1.00/

AREA TYPE	TOTAL GROSS AREA	PCT OF BASE	YEAR	TOT ADJ AREA	SUBAREA MARKET VALUE
BAS	2,216	100	2024	2,216	283,165
FGR	625	55	2024	344	43,957
FOP	174	30	2024	52	6,644
FOP	247	30	2024	74	9,456
TOTALS	3,262			2,686	343,223

MARKET ADJUSTMENTS

TYPE	MDL	EFF. AREA	TOT ADJ PTS	EFF. BASE RATE	REPL. COST NEW	AYB	EYB	ECON	FNCT		NORM	% COND
0100	01	2,686	116.4240	130.39	350,228	2023	2023	0	0	0	2.00	98.00

1 SINGLE FAM 100% - 2025 Heated Area: 2216 HX Base Yr 2025

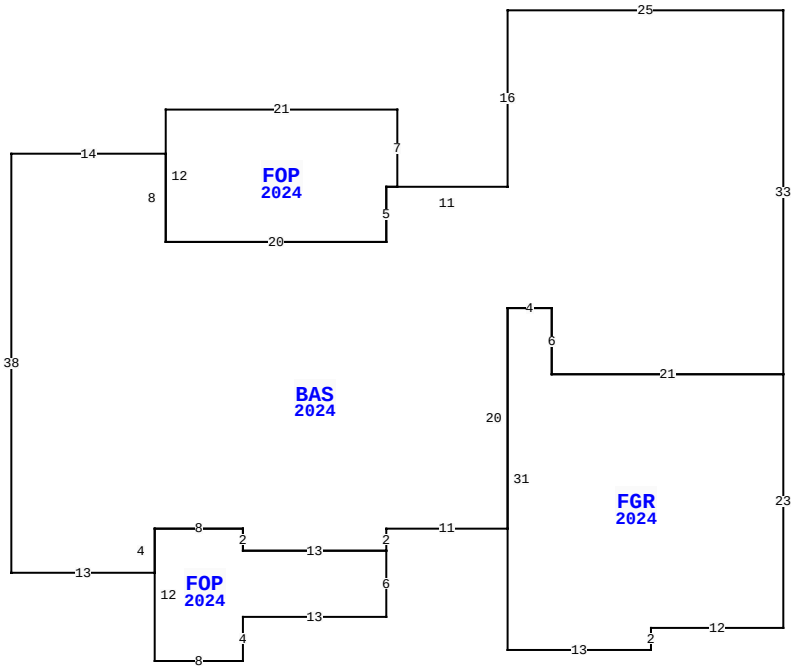

190 SW THISTLEWOOD LN, FORT WHITE

BLD DATE		LGL DATE	
XF DATE		LAND DATE	04/21/2023 MLU
INC DATE		AG DATE	

VALUATION SUMMARY

VALUATION BY		STANDARD
Tax Group: 4	Tax Dist:	
BUILDING MARKET VALUE		343,223
TOTAL MARKET OB/XF VALUE		6,900
TOTAL LAND VALUE - MARKET		28,000
TOTAL MARKET VALUE		378,123
SOH/AGL Deduction		0
ASSESSED VALUE		378,123
TOTAL EXEMPTION VALUE	HX HB	50,722
BASE TAXABLE VALUE		327,401
TOTAL JUST VALUE		378,123
NCON VALUE		0
INCOME VALUE		
PREVIOUS YEAR MKT VALUE		381,626

PERMIT NUM	DESCRIPTION	AMT	ISSUED
000050325	Swimming Pool and	30,000	07/10/2024
000045580	New Residential C	0	09/28/2022

SALES DATA

OFF RECORD Number	DATE	TYPE INST	Q U	V I	RSN CD	SALE PRICE
1454/1436	12/10/2021	WD	Q	V	01	45,000
GRANTOR: POTTER KELLY						
GRANTEE: WENTWORTH CALEB JAC						
1416/1078	7/06/2020	WD	U	V	11	100
GRANTOR: OLD CYPRESS HOLDINGS						
GRANTEE: KELLY & DAVID POTTE						

BUILDING NOTES

BUILDING DIMENSIONS

BAS=[YR=2024;ORIG=80,20] W25 S16 W11 S5 W20 N8 W14 S38 E13 N4 E8 S2 E13 N2 E11 N20 E4 S6 E21 N33 $
FGR=[YR=2024;ORIG=80,53] W21 N6 W4 S31 E13 N2 E12 N23 $
FOP=[YR=2024;ORIG=45,29] W21 S12 E20 N5 E1 N7 $
FOP=[YR=2024;ORIG=44,69] W13 N2 W8 S12 E8 N4 E13 N6 $
.

EXTRA FEATURES

LN	OB/XF CODE	DESCRIPTION	BLD	CAP	L	W	UNITS	UT	Adj R	ADJ UNIT PRICE	ORIG COND	YEAR ON	YEAR ACTUAL	Q	% COND	OB/XF MKT VALUE	NOTES
1	0166	CONC,PAVMT	0	100	0	0	1.00	UT	6,100.00	6,100.00	100	2024	2023		100	6,100	
2	0169	FENCE/WOOD	0	100	0	0	1.00	UT	800.00	800.00	100	2024	2023		100	800	

LAND DESCRIPTION

TOTAL OB/XF 6,900

LN	USE CODE	CLS	LAND USE DESCRIPTION	CAP	RD	LOC ZONE	FRONT	DEPTH	TOT LND UTS	UNIT TYPE	DT	DPTH FACT	% COND	TOT ADJ	UNIT PRICE	ADJ UNIT PRICE	LAND VALUE	OTHER ADJUSTMENTS AND NOTES	YEAR	DENSITY	DECL	FRZ	YR	CONSRV
1	0100	C	SFR	100		A-1	0.00	0.00	1.00	LT		1.00	1.00	1.00	28,000.00	28,000.00	28,000							

REVIEW DATE 07/15/2024 BY hoyle Total Acres: 1.25 Total Land Value: 28,000 Market: 0 Agricultural: 0 Common: 28,000 PRINTED 11/17/2025 BY SYS