PART OF LOTS 3 & 4 & LOTS 5,6, 7
IN LOT 8 AS LIES NORTH US-90, BL
CLUB ESTATES S/D DESC AS FOLLOWS

PNJP LLC
3144 W US HIGHWAY 90
LAKE CITY, FL 32025

**2026**

**34-3S-17-07078-000**

## COLUMBIA COUNTY PROPERTY



### BUILDING CHARACTERISTICS

| ELEMENT | CD | CONSTRUCTION |
|---|---|---|
| Exterior Wall | 05 | AVERAGE 80 |
| Exterior Wall | 19 | COMMON BRK 20 |
| Roof Structur | 04 | WOOD TRUSS 100 |
| Roof Cover | 12 | MODULAR MT 100 |
| Interior Wall | 08 | DECORATIVE 100 |
| Interior Floo | 06 | VINYL ASB 100 |
| Ceiling | 02 | F.NOT SUS 100 |
| Air Condition | 03 | CENTRAL 100 |
| Heating Type | 04 | AIR DUCTED 100 |
| Fixtures | | 4 100 |
| Frame | 02 | WOOD FRAME 100 |
| Story Height | | 9 100 |
| RMS | | 4 100 |
| Stories | 1. | 1. 100 |
| Units | | 0 100 |
| Condition Adj | 03 | 03 100 |
| Quality | 05 | 05 |

| | | | |
|---|---|---|---|
| DOR CODE | 1126 | CONV STORE/GAS | |
| MAP NUM | | MKT AREA | 06 |
| NEIGHBORHOOD/LOC | 34317.070 | 1.00/ | |

| AREA TYPE | TOTAL GROSS AREA | PCT OF BASE | YEAR | TOT ADJ AREA | SUBAREA MARKET VALUE |
|---|---|---|---|---|---|
| BAS | 1,843 | 100 | | 1,843 | 62,966 |
| CAN | 1,968 | 30 | | 590 | 20,158 |
| UST | 651 | 40 | | 260 | 8,883 |
| TOTALS | 4,462 | | | 2,693 | 92,006 |

### MARKET ADJUSTMENTS

| TYPE | MDL | EFF. AREA | TOT ADJ PTS | EFF. BASE RATE | REPL. COST NEW | AYB | EYB | ECON | FNCT | | NORM | % COND |
|---|---|---|---|---|---|---|---|---|---|---|---|---|
| 4300 | 04 | 2,693 | 91.1040 | 68.33 | 184,013 | 1945 | 1970 | 0 | 0 | 0 | 50.00 | 50.00 |

1 NBHD CONVE 0% - 0 Heated Area: 1843 HX Base Yr

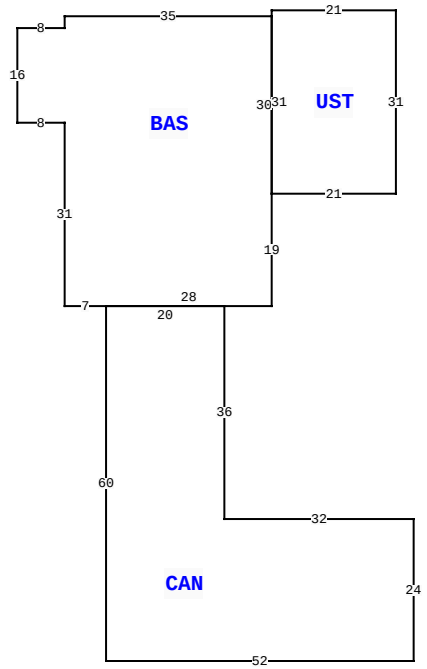


1889 E DUVAL ST, LAKE CITY

| | | | |
|---|---|---|---|
| BLD DATE | | LGL DATE | |
| XF DATE | | LAND DATE | |
| INC DATE | | AG DATE | |

### VALUATION SUMMARY

| | |
|---|---|
| VALUATION BY | STANDARD |
| Tax Group: 2 | Tax Dist: |
| BUILDING MARKET VALUE | 92,006 |
| TOTAL MARKET OB/XF VALUE | 1,500 |
| TOTAL LAND VALUE - MARKET | 46,758 |
| TOTAL MARKET VALUE | 140,264 |
| SOH/AGL Deduction | 0 |
| ASSESSED VALUE | 140,264 |
| TOTAL EXEMPTION VALUE | 0 |
| BASE TAXABLE VALUE | 140,264 |
| TOTAL JUST VALUE | 140,264 |
| NCON VALUE | 0 |
| INCOME VALUE | |
| PREVIOUS YEAR MKT VALUE | 140,264 |

| PERMIT NUM | DESCRIPTION | AMT | ISSUED |
|---|---|---|---|
| 000046072 | Electrical Servic | 2,000 | 12/09/2022 |
| 30771 | MAINT/ALTR | 40 | 02/07/2013 |
| 29231 | ADDN COMM | 162 | 03/04/2011 |

### SALES DATA

| OFF RECORD Number | DATE | TYPE INST | Q U / | V I / | RSN CD | SALE PRICE |
|---|---|---|---|---|---|---|
| 1369/0911 | 9/20/2018 | WD | U | I | 37 | 550,000 |
| GRANTOR: OMI OF LAKE CITY LLC | | | | | | |
| GRANTEE: PNJP LLC | | | | | | |
| 1175/1686 | 6/18/2009 | QC | U | I | 11 | 100 |
| GRANTOR: THE KINJAC CORP | | | | | | |
| GRANTEE: OMI OF LAKE CITY LL | | | | | | |

### BUILDING NOTES

### BUILDING DIMENSIONS

BAS= W35 S2 W8 S16 E8 S31 E7 CAN= S60 E52 N24 W32 N36 W20$ E28 N19 UST= E21 N31 W21 S31$ N30$.

### EXTRA FEATURES

| LN | OB/XF CODE | DESCRIPTION | BLD | CAP | L | W | UNITS | UT | Adj R | ADJ UNIT PRICE | ORIG COND | YEAR ON | YEAR ACTUAL | Q | % COND | OB/XF MKT VALUE | NOTES |
|---|---|---|---|---|---|---|---|---|---|---|---|---|---|---|---|---|---|
| 1 | 0260 | PAVEMENT-A | 0 | 0 | 0 | 0 | 1.00 | UT | 0.00 | 0.00 | 100 | 1993 | 1993 | 3 | 100 | 1,000 | |
| 2 | 0140 | CLFENCE 6 | 0 | 0 | 0 | 0 | 1.00 | UT | 0.00 | 0.00 | 100 | 2001 | 2001 | 3 | 100 | 200 | |
| 3 | 0166 | CONC,PAVMT | 0 | 0 | 0 | 0 | 1.00 | UT | 0.00 | 0.00 | 100 | 2001 | 2001 | 3 | 100 | 300 | |

### LAND DESCRIPTION

TOTAL OB/XF 1,500

| LN | USE CODE | CLS | LAND USE DESCRIPTION | CAP | RD | LOC ZONE | FRONT | DEPTH | TOT LND UTS | UNIT TYPE | DT | DPTH FACT | % COND | TOT ADJ | UNIT PRICE | ADJ UNIT PRICE | LAND VALUE | OTHER ADJUSTMENTS AND NOTES | YEAR | DENSITY | DECL | FRZ | YR | CONSRV |
|---|---|---|---|---|---|---|---|---|---|---|---|---|---|---|---|---|---|---|---|---|---|---|---|---|
| 1 | 1410 | C | CONV STORE | 0 | | CI | 125.00 | 175.00 | 21,875.00 | SF | | 1.00 | 1.00 | 0.95 | 2.25 | 2.14 | 46,758 | | | | | | | |

REVIEW DATE 06/02/2023 BY mark Total Acres: 0.50 Total Land Value: 46,758 Market: 0 Agricultural: 0 Common: 46,758 PRINTED 11/18/2025 BY SYS