THAT PORTION OF LOT 9 CATHEY'S
S/D AS LIES S OF SR-10A.

REED DON L/REED BEVERLY L
2230 SE BAYA DR STE 101
LAKE CITY, FL 32025

2026

34-3S-17-06968-001

COLUMBIA COUNTY PROPERTY

BUILDING CHARACTERISTICS

ELEMENT	CD	CONSTRUCTION
Exterior Wall	19	COMMON BRK 70
Exterior Wall	15	CONC BLOCK 30
Roof Structur	03	GABLE/HIP 100
Roof Cover	03	COMP SHNGL 100
Interior Wall	05	DRYWALL 80
Interior Wall	08	DECORATIVE 20
Interior Floo	14	CARPET 100
Ceiling	02	F.NOT SUS 100
Air Condition	06	ENG CENTRL 100
Heating Type	04	AIR DUCTED 100
Fixtures		11 100
Frame	03	MASONRY 100
Story Height		12 100
RMS		12 100
Stories	2.	2. 100
Units		0 100
Condition Adj	03	03 100
Quality	06	06
DOR CODE	1700	OFFICE BLD 1STY
MAP NUM		MKT AREA 06
NEIGHBORHOOD/LOC	34317.00	1.00/

AREA TYPE	TOTAL GROSS AREA	PCT OF BASE	YEAR	TOT ADJ AREA	SUBAREA MARKET VALUE
APT	513	100		513	24,575
BAS	270	100		270	12,934
BAS	270	100		270	12,934
BAS	1,586	100		1,586	75,976
CAN	36	30		11	527
CAN	36	30		11	527
CAN	36	30		11	527
FGR	450	60		270	12,934
FGR	564	60		338	16,192
FGR	1,530	60		918	43,976
TOTALS	7,413			6,180	296,047

MARKET ADJUSTMENTS

TYPE	MDL	EFF. AREA	TOT ADJ PTS	EFF. BASE RATE	REPL. COST NEW	AYB	EYB	ECON	FNCT		NORM	% COND
4900	04	6,180	107.8941	79.84	493,411	1997	1997	0	0	0	40.00	60.00

1 OFFICE LOW 0% - 0 Heated Area: 4509 HX Base Yr

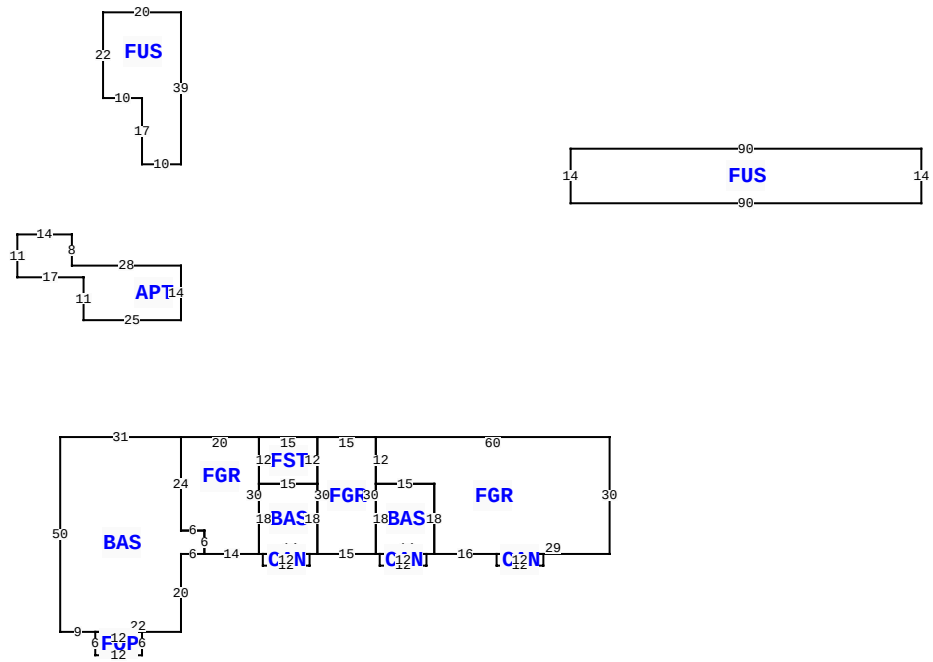

** This building has 14 Sub-Areas

2230 SE BAYA DR, LAKE CITY

BLD DATE		LGL DATE	
XF DATE		LAND DATE	
INC DATE		AG DATE	

VALUATION SUMMARY

VALUATION BY	STANDARD
Tax Group: 2	Tax Dist:
BUILDING MARKET VALUE	296,047
TOTAL MARKET OB/XF VALUE	13,731
TOTAL LAND VALUE - MARKET	40,500
TOTAL MARKET VALUE	350,278
SOH/AGL Deduction	0
ASSESSED VALUE	350,278
TOTAL EXEMPTION VALUE	0
BASE TAXABLE VALUE	350,278
TOTAL JUST VALUE	350,278
NCON VALUE	0
INCOME VALUE	
PREVIOUS YEAR MKT VALUE	365,080

LAND:1:1: IRREGULAR SHAPE

SALE:1:1: 0.57 AC

PERMIT NUM	DESCRIPTION	AMT	ISSUED
000043416	Roof Replacement	15,000	12/20/2021
12027	COMMERCIAL	650	01/09/1997

SALES DATA

OFF RECORD Number	DATE	TYPE INST	Q U /	V I /	RSN CD	SALE PRICE
0833/0144	1/03/1997	WD	Q	V		10,000

GRANTOR: WESTVACO CORP

GRANTEE: DN L & BEVERLY L RE

BUILDING NOTES

BUILDING DIMENSIONS

BAS= W31 S50 E9 FOP= S6 E12 N6 W12$ E22 N20 E6 FGR= E14 BAS= E1 CAN= S3 E12 N3 W12$ E14 FGR= E15 BAS= E1 CAN= S3 E12 N3 W12$ E14 FGR= E16 CAN= S3 E12 N3 W12$ E29 N30 W60 S12 E15 S18$ N18 W15 S18$ N30 W15 S30$ N18 FST= N12 W15S12 E15$ W15 S18$ N30 W20 S24 E6 S6$ N6 W6 N24$ PTR= N30 APT= N14 W28 N8 W14 S11 E17 S11 E25$ S30$ PTR= N70 FUS= N39 W20 S22 E10 S17 E10$ S70$ PTR= N60 E100 FUS= E90 N14 W90 S14$ S60 W100$.

EXTRA FEATURES

LN	OB/XF CODE	DESCRIPTION	BLD	CAP	L	W	UNITS	UT	Adj R	ADJ UNIT PRICE	ORIG COND	YEAR ON	YEAR ACTUAL	Q	% COND	OB/XF MKT VALUE	NOTES
1	0166	CONC,PAVMT	0	0	0	0	9,154.00	UT	1.50	1.50	100	1997	1997	3	100	13,731	

LAND DESCRIPTION

TOTAL OB/XF 13,731

LN	USE CODE	CLS	LAND USE DESCRIPTION	CAP	RD	LOC ZONE	FRONT	DEPTH	TOT LND UTS	UNIT TYPE	DT	DPTH FACT	% COND	TOT ADJ	UNIT PRICE	ADJ UNIT PRICE	LAND VALUE	OTHER ADJUSTMENTS AND NOTES	YEAR	DENSITY	DECL	FRZ	YR	CONSRV
1	1700	C	1STORY OFF	0		CN	0.00	0.00	30,000.00	SF		1.00	1.00	1.00	1.35	1.35	40,500							

REVIEW DATE 01/25/2017 BY DF Total Acres: 0.69 Total Land Value: 40,500 Market: 0 Agricultural: 0 Common: 40,500 PRINTED 11/04/2025 BY SYS