LOT 10 & W 12 FT OF LOT 11 BLOCK
VILLAGE S/D.

BELL LAWONDA L
187 SW MERCURY LN
LAKE CITY, FL 32024

2026

34-3S-16-02472-001

COLUMBIA COUNTY PROPERTY

BUILDING CHARACTERISTICS

ELEMENT	CD	CONSTRUCTION
Exterior Wall	19	COMMON BRK 90
Exterior Wall	31	VINYL SID 10
Roof Structur	03	GABLE/HIP 100
Roof Cover	12	MODULAR MT 100
Interior Wall	05	DRYWALL 100
Interior Floo	14	CARPET 90
Interior Floo	06	VINYL ASB 10
Air Condition	03	CENTRAL 100
Heating Type	04	AIR DUCTED 100
Bedrooms		3 100
Bathrooms		2 100
Frame	01	NONE 100
Stories	1.	1. 100
Architectual	05	CONV 100
Units		0 100
Condition Adj	03	03 100
Kitchen Adjus	01	01 100
Quality	05	05
DOR CODE	0100	SINGLE FAMILY
MAP NUM		MKT AREA 06
NEIGHBORHOOD/LOC	34316.010	1.00/

AREA TYPE	TOTAL GROSS AREA	PCT OF BASE	YEAR	TOT ADJ AREA	SUBAREA MARKET VALUE
BAS	91	100		91	7,295
BAS	120	100		120	9,620
BAS	560	100		560	44,892
BAS	1,743	100		1,743	139,727
FOP	76	30		23	1,844
FSP	204	40		82	6,573
TOTALS	2,794			2,619	209,951

MARKET ADJUSTMENTS

TYPE	MDL	EFF. AREA	TOT ADJ PTS	EFF. BASE RATE	REPL. COST NEW	AYB	EYB	ECON	FNCT		NORM	% COND
0100	01	2,619	110.1120	123.33	323,001	1971	1980	0	0	0	35.00	65.00

1 SINGLE FAM 100% - 0 Heated Area: 2514 HX Base Yr

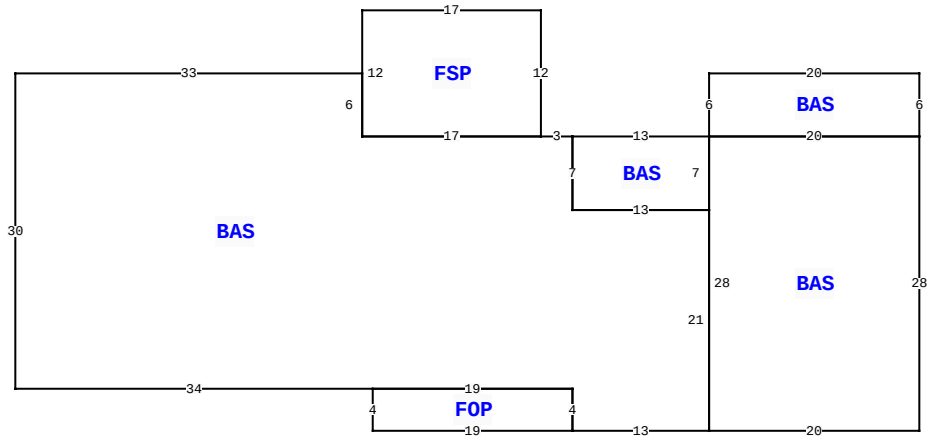

187 SW MERCURY LN, LAKE CITY

BLD DATE		LGL DATE	
XF DATE		LAND DATE	04/21/2023 MLU
INC DATE		AG DATE	

VALUATION SUMMARY

VALUATION BY		STANDARD
Tax Group: 2	Tax Dist:	
BUILDING MARKET VALUE		209,951
TOTAL MARKET OB/XF VALUE		688
TOTAL LAND VALUE - MARKET		18,500
TOTAL MARKET VALUE		229,139
SOH/AGL Deduction		97,562
ASSESSED VALUE		131,577
TOTAL EXEMPTION VALUE	HX HB	50,722
BASE TAXABLE VALUE		80,855
TOTAL JUST VALUE		229,139
NCON VALUE		0
INCOME VALUE		
PREVIOUS YEAR MKT VALUE		229,139

LAND:1:1: 0.55 AC.

PERMIT NUM	DESCRIPTION	AMT	ISSUED
34395	MAINT/ALTR	252	08/30/2016

SALES DATA

OFF RECORD Number	DATE	TYPE INST	Q U	V I	RSN CD	SALE PRICE
1219/0707	8/09/2011	QC	U	I	11	100
GRANTOR: CHARLES W MOBLEY						
GRANTEE: LAWONDA L BELL						
0513/0025	5/01/1983	WD	Q	I	01	45,000
GRANTOR:						
GRANTEE:						

BUILDING NOTES

BUILDING DIMENSIONS

BAS= W3 FSP= N12 W17 S12 E17$ W17 N6 W33 S30 E34 FOP= S4 E19 N4 W19$ E19 S4 E13 BAS= E20 N28 BAS= N6 W20 S6 E20$ W20 S28$ N21 BAS= N7 W13 S7 E13$W13 N7$.

EXTRA FEATURES

LN	OB/XF CODE	DESCRIPTION	BLD	CAP	L	W	UNITS	UT	Adj R	ADJ UNIT PRICE	ORIG COND	YEAR ON	YEAR ACTUAL	Q	% COND	OB/XF MKT VALUE	NOTES
1	0166	CONC,PAVMT	0	100	0	0	1.00	UT	0.00	0.00	100	0	0	3	100	125	
2	0120	CLFENCE 4	0	100	0	0	250.00	UT	4.50	4.50	50	1993	1993	3	50	563	

LAND DESCRIPTION

TOTAL OB/XF 688

LN	USE CODE	CLS	LAND USE DESCRIPTION	CAP	RD	LOC ZONE	FRONT	DEPTH	TOT LND UTS	UNIT TYPE	DT	DPTH FACT	% COND	TOT ADJ	UNIT PRICE	ADJ UNIT PRICE	LAND VALUE	OTHER ADJUSTMENTS AND NOTES	YEAR	DENSITY	DECL	FRZ	YR	CONSRV
1	0100	C	SFR	100		RSF-	1137.00	175.00	1.00	LT		1.00	1.00	1.00	18,500.00	18,500.00	18,500							

REVIEW DATE 06/07/2023 BY KS Total Acres: 0.55 Total Land Value: 18,500 Market: 0 Agricultural: 0 Common: 18,500 PRINTED 11/07/2025 BY SYS