LOT 11 OAK MEADOW PLANTATION
UNIT 3.

MORRISON JUSTIN/MORRISON DEANNA
818 NW SAVANNAH CIR
LAKE CITY, FL 32055

2026

34-3S-16-02462-311

BUILDING CHARACTERISTICS

ELEMENT	CD	CONSTRUCTION
Exterior Wall	19	COMMON BRK 100
Roof Structur	03	GABLE/HIP 100
Roof Cover	03	COMP SHNGL 100
Interior Wall	05	DRYWALL 100
Interior Floo	14	CARPET 80
Interior Floo	15	HARDTILE 20
Air Condition	03	CENTRAL 100
Heating Type	04	AIR DUCTED 100
Bedrooms		4 100
Bathrooms		3 100
Frame	02	WOOD FRAME 100
Stories	1.	1. 100
Architectual	05	CONV 100
Units		0 100
Condition Adj	03	03 100
Kitchen Adjus	01	01 100
Quality	06	06

DOR CODE 0100 SINGLE FAMILY
MAP NUM | MKT AREA 06
NEIGHBORHOOD/LOC 34316.070 1.00/

AREA TYPE	TOTAL GROSS AREA	PCT OF BASE	YEAR	TOT ADJ AREA	SUBAREA MARKET VALUE
BAS	2,516	100		2,516	271,538
FGR	648	55		356	38,421
FOP	69	30		21	2,266
FOP	260	30		78	8,418
UDU	204	55		112	12,088
UDU	228	55		125	13,491
TOTALS	3,925			3,208	346,222

MARKET ADJUSTMENTS

TYPE	MDL	EFF. AREA	TOT ADJ PTS	EFF. BASE RATE	REPL. COST NEW	AYB	EYB	ECON	FNCT		NORM	% COND
0100	01	3,208	118.9608	133.24	427,434	2006	2006	0	0	0	19.00	81.00

1 SINGLE FAM 0% - 2021 Heated Area: 2516 HX Base Yr

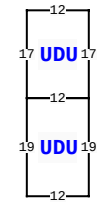

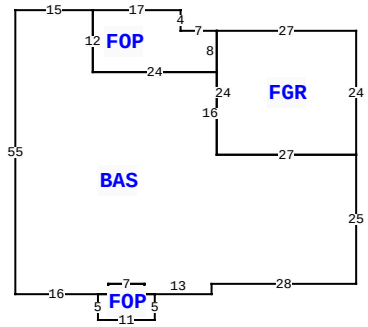

818 NW SAVANNAH CIR, LAKE CITY

BLD DATE		LGL DATE	
XF DATE		LAND DATE	04/03/2025 MLU
INC DATE		AG DATE	

EXTRA FEATURES

LN	OB/XF CODE	DESCRIPTION	BLD	CAP	L	W	UNITS	UT	Adj R	ADJ UNIT PRICE	ORIG COND	YEAR ON	YEAR ACTUAL	Q	% COND	OB/XF MKT VALUE	NOTES
1	0166	CONC,PAVMT	0	0	0	0	2,876.00	UT	1.60	1.60	75	2006	2006	3	75	3,451	
2	0280	POOL R/CON	0	0	14	38	532.00	UT	70.00	70.00	100	2008	2008	3	58	21,599	
3	0169	FENCE/WOOD	0	0	0	0	384.00	UT	10.50	10.50	100	2008	2008	3	100	4,032	

COLUMBIA COUNTY PROPERTY

VALUATION SUMMARY

VALUATION BY	STANDARD
Tax Group: 1	Tax Dist:
BUILDING MARKET VALUE	346,222
TOTAL MARKET OB/XF VALUE	29,082
TOTAL LAND VALUE - MARKET	35,000
TOTAL MARKET VALUE	410,304
SOH/AGL Deduction	0
ASSESSED VALUE	410,304
TOTAL EXEMPTION VALUE	0
BASE TAXABLE VALUE	410,304
TOTAL JUST VALUE	410,304
NCON VALUE	0
INCOME VALUE	
PREVIOUS YEAR MKT VALUE	415,695

PERMIT NUM	DESCRIPTION	AMT	ISSUED
000047313	Remodel	13,500	05/24/2023
000044539	Roof Replacement	27,090	05/26/2022
834	POOL	352	05/29/2008
3585	SFR	50	02/02/2006

SALES DATA

OFF RECORD Number	DATE	TYPE INST	Q U	V I	RSN CD	SALE PRICE
1408/2078	3/24/2020	WD	Q	I	01	304,000
GRANTOR: BENJAMIN D & CAMERON						
GRANTEE: JUSTIN & DEANNA MOR						
1066/0103	11/22/2005	WD	Q	V		42,500
GRANTOR: RICHARD COLE AND DANI						
GRANTEE: SCOTT						

BUILDING NOTES

BUILDING DIMENSIONS

BAS= W15 S55 E16 FOP= S5 E11 N5 W2 N2 W7 S2 W2$ E2 N2 E7 S2 E13N2 E28 N25 FGR= N24 W27 S24 E27$ W27 N16 FOP= N8 W7 N4 W17 S12 E24$ W24 N12$ PTR= N30 UDU= N19 UDU= N17 W12 S17 E12$ W12 S19 E12$ S30$.

LAND DESCRIPTION

TOTAL OB/XF 29,082

LN	USE CODE	CLS	LAND USE DESCRIPTION	CAP	RD	LOC ZONE	FRONT	DEPTH	TOT LND UTS	UNIT TYPE	DT	DPTH FACT	% COND	TOT ADJ	UNIT PRICE	ADJ UNIT PRICE	LAND VALUE	OTHER ADJUSTMENTS AND NOTES	YEAR	DENSITY	DECL	FRZ	YR	CONSRV
1	0100	C	SFR	0		RSF-1	0.00	0.00	1.00	LT		1.00	1.00	1.00	35,000.00	35,000.00	35,000							

REVIEW DATE 06/07/2023 BY JB Total Acres: 0.63 Total Land Value: 35,000 Market: 0 Agricultural: 0 Common: 35,000 PRINTED 10/03/2025 BY SYS