LOT 10 OAK MEADOW PLANTATION
UNIT 3.

WARD JEROMEY L/WARD KRISTEN L
792 NW SAVANNAH CIR
LAKE CITY, FL 32055

2026

34-3S-16-02462-310

COLUMBIA COUNTY PROPERTY

BUILDING CHARACTERISTICS

ELEMENT	CD	CONSTRUCTION
Exterior Wall	19	COMMON BRK 100
Roof Structur	03	GABLE/HIP 100
Roof Cover	03	COMP SHNGL 100
Interior Wall	05	DRYWALL 100
Interior Floo	14	CARPET 80
Interior Floo	15	HARDTILE 20
Air Condition	03	CENTRAL 100
Heating Type	04	AIR DUCTED 100
Bedrooms		4 100
Bathrooms		3 100
Frame	02	WOOD FRAME 100
Stories	1.	1. 100
Architectual	05	CONV 100
Units		0 100
Quality	06	06

DOR CODE	0100	SINGLE FAMILY	
MAP NUM		MKT AREA	06
NEIGHBORHOOD/LOC	34316.070	1.00/	

AREA TYPE	TOTAL GROSS AREA	PCT OF BASE	YEAR	TOT ADJ AREA	SUBAREA MARKET VALUE
BAS	368	100		368	38,701
BAS	2,693	100		2,693	283,209
BAS	240	100	2022	240	25,240
FGR	572	55		315	33,127
FOP	78	30		23	2,419
FOP	80	30		24	2,524
FSP	348	40		139	14,618
TOTALS	4,379			3,802	399,837

MARKET ADJUSTMENTS

TYPE	MDL	EFF. AREA	TOT ADJ PTS	EFF. BASE RATE	REPL. COST NEW	AYB	EYB	ECON	FNCT		NORM	% COND
0100	01	3,802	114.5130	128.25	487,606	2007	2007	0	0	0	18.00	82.00

1 SINGLE FAM 100% - 2019 Heated Area: 3301 HX Base Yr 2019

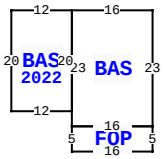

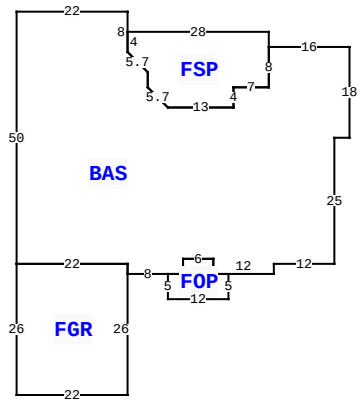

792 NW SAVANNAH CIR, LAKE CITY

BLD DATE		LGL DATE	
XF DATE		LAND DATE	04/03/2025 MLU
INC DATE		AG DATE	

VALUATION SUMMARY

VALUATION BY		STANDARD
Tax Group: 1	Tax Dist:	
BUILDING MARKET VALUE		399,837
TOTAL MARKET OB/XF VALUE		76,280
TOTAL LAND VALUE - MARKET		35,000
TOTAL MARKET VALUE		511,117
SOH/AGL Deduction		105,046
ASSESSED VALUE		406,071
TOTAL EXEMPTION VALUE	HX HB	50,722
BASE TAXABLE VALUE		355,349
TOTAL JUST VALUE		511,117
NCON VALUE		0
INCOME VALUE		
PREVIOUS YEAR MKT VALUE		517,068

PERMIT NUM	DESCRIPTION	AMT	ISSUED
202000737	ADD TO POOL HOUSE		01/06/2021
1798	POOL ENCL	50	06/30/2010
1751	POOL	25	05/17/2010
3815	SFR	902	07/24/2006
00400			

SALES DATA

OFF RECORD Number	DATE	TYPE INST	Q U	V I	RSN CD	SALE PRICE
1364/0417	7/06/2018	WD	Q	I	01	305,000
GRANTOR: MARK E & M ANNE REIFS						
GRANTEE: JEROMEY L & KRISTEN						
1082/2112	5/03/2006	WD	Q	V		65,000
GRANTOR: ISAAC HOLDINGS INC. (						
GRANTEE: MARK E & M ANNE REI						

BUILDING NOTES

BUILDING DIMENSIONS

BAS=[ORIG=0,0] W22 S50 E22 S2 E8 E3 N3 E6 S3 E12 N2 E12 N25
E3 N18 W16 S8 W7 S4 W13 U4L4 N3 U4L4 N8 $
FGR=[ORIG=-22,50] S26 E22 N26 W22 $
BAS=[ORIG=0,-30] N23 W16 S23 E16 $
FSP=[ORIG=28,7] N3 W28 S4 D4R4 S3 D4R4 E13 N4 E7 N8 $
FOP=[ORIG=-16,-30] S5 E16 N5 W16 $
FOP=[ORIG=8,52] S5 E12 N5 W3 N3 W6 S3 W3 $
BAS=[YR=2022;ORIG=-28,-53] S20 E12 N20 W12 $
.

EXTRA FEATURES

LN	OB/XF CODE	DESCRIPTION	BLD	CAP	L	W	UNITS	UT	Adj R	ADJ UNIT PRICE	ORIG COND	YEAR ON	YEAR ACTUAL	Q	% COND	OB/XF MKT VALUE	NOTES
1	0166	CONC,PAVMT	0	100	0	0	2,147.00	UT	2.00	2.00	100	2007	2007	3	100	4,294	
2	0280	POOL R/CON	0	100	16	32	512.00	UT	70.00	70.00	100	2010	2010	3	65	23,296	
3	0282	POOL ENCL	0	100	35	53	1,855.00	UT	15.00	15.00	100	2010	2010	3	40	11,130	
4	0169	FENCE/WOOD	0	100	0	0	1.00	UT	0.00	0.00	100	2010	2010	3	100	2,000	
5	0294	SHED WOOD/	0	100	0	0	1.00	UT	0.00	0.00	100	2014	2014	3	100	2,200	
6	0294	SHED WOOD/	0	100	0	0	1.00	UT	0.00	0.00	100	2014	2014	3	100	2,200	
7	0169	FENCE/WOOD	0	100	0	0	320.00	UT	15.50	15.50	100	2014	2014	3	100	4,960	
8	0190	FPLC PF	0	100	0	0	1.00	UT	1,200.00	1,200.00	100	2016	2016	3	100	1,200	
9	0258	PATIO	0	100	0	0	1.00	UT	0.00	0.00	100	2016	2016	3	100	25,000	

LAND DESCRIPTION

TOTAL OB/XF 76,280

LN	USE CODE	CLS	LAND USE DESCRIPTION	CAP	RD	LOC ZONE	FRONT	DEPTH	TOT LND UTS	UNIT TYPE	DT	DPTH FACT	% COND	TOT ADJ	UNIT PRICE	ADJ UNIT PRICE	LAND VALUE	OTHER ADJUSTMENTS AND NOTES	YEAR	DENSITY	DECL	FRZ	YR	CONSRV
1	0100	C	SFR	100		RSF-1	0.00	0.00	1.00	LT		1.00	1.00	1.00	35,000.00	35,000.00	35,000							

REVIEW DATE 05/16/2025 BY JS Total Acres: 0.51 Total Land Value: 35,000 Market: 0 Agricultural: 0 Common: 35,000 PRINTED 10/03/2025 BY SYS