LOT 19 OAK MEADOW PLANTATION
UNIT 2. ORB 816-2412-2423,
WD 1031-1381, CT 1282-798,

NI HENG JI JUSTIN
4481 NW WISTERIA DR
LAKE CITY, FL 32055-4803

2025

34-3S-16-02462-219

COLUMBIA COUNTY PROPERTY

BUILDING CHARACTERISTICS

ELEMENT	CD	CONSTRUCTION
Exterior Wall	19	COMMON BRK 100
Roof Structur	03	GABLE/HIP 100
Roof Cover	03	COMP SHNGL 100
Interior Wall	05	DRYWALL 100
Interior Floo	14	CARPET 70
Interior Floo	15	HARDTILE 30
Air Condition	03	CENTRAL 100
Heating Type	04	AIR DUCTED 100
Bedrooms		4 100
Bathrooms		3 100
Frame	02	WOOD FRAME 100
Stories	1.	1. 100
Architectual	05	CONV 100
Units		0 100
Condition Adj	03	03 100
Kitchen Adjus	01	01 100
Quality	06	06
DOR CODE	0100	SINGLE FAMILY
MAP NUM		MKT AREA 06
NEIGHBORHOOD/LOC	34316.070	1.00/

AREA TYPE	TOTAL GROSS AREA	PCT OF BASE	YEAR	TOT ADJ AREA	SUBAREA MARKET VALUE
BAS	2,946	100		2,946	317,659
FGR	528	55		290	31,270
FOP	56	30		17	1,833
FSP	256	40		102	10,998
TOTALS	3,786			3,355	361,761

MARKET ADJUSTMENTS

TYPE	MDL	EFF. AREA	TOT ADJ PTS	EFF. BASE RATE	REPL. COST NEW	AYB	EYB	ECON	FNCT		NORM	% COND
0100	01	3,355	118.8590	133.12	446,618	2005	2005	0	0	0	19.00	81.00

1 SINGLE FAM 100% - 2016 Heated Area: 2946 HX Base Yr 2016

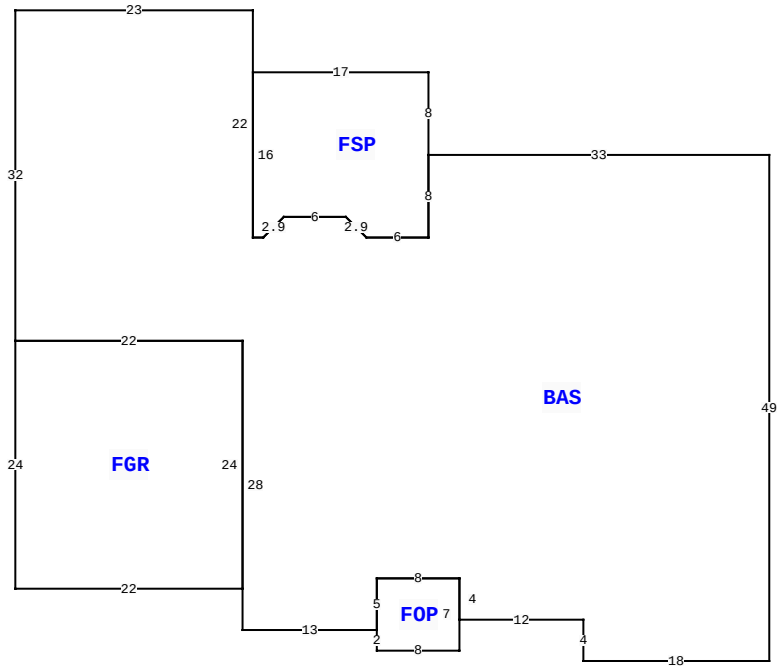

4481 NW WISTERIA DR, LAKE CITY

BLD DATE		LGL DATE	
XF DATE		LAND DATE	04/03/2025 MLU
INC DATE		AG DATE	

VALUATION SUMMARY

VALUATION BY		STANDARD
Tax Group: 1	Tax Dist:	
BUILDING MARKET VALUE		361,761
TOTAL MARKET OB/XF VALUE		6,764
TOTAL LAND VALUE - MARKET		35,000
TOTAL MARKET VALUE		403,525
SOH/AGL Deduction		133,401
ASSESSED VALUE		270,124
TOTAL EXEMPTION VALUE	HX HB	50,722
BASE TAXABLE VALUE		219,402
TOTAL JUST VALUE		403,525
NCON VALUE		0
INCOME VALUE		
PREVIOUS YEAR MKT VALUE		380,101

PERMIT NUM	DESCRIPTION	AMT	ISSUED
000044883	Roof Replacement	28,125	07/06/2022
3126	SFR	742	12/20/2004

SALES DATA

OFF RECORD Number	DATE	TYPE INST	Q U	V I	RSN CD	SALE PRICE
1302/2704	10/15/2015	WD	U	I	18	210,000
GRANTOR: FEDERAL NATIONAL MORT						
GRANTEE: HENG JI JUSTIN NI						
1282/0798	9/29/2014	CT	U	I	18	0
GRANTOR: CLERK OF COURTS						
GRANTEE: FEDERAL NATIONAL MO						

BUILDING NOTES

BUILDING DIMENSIONS

BAS= W33 FSP= N8 W17 S16 E1 R2 U2 E6 D2 R2 E6 N8$ S8 W6 L2 U2 W6 D2 L2 W1 N22 W23 S32 FGR= S24 E22 N24 W22$ E22 S28 E13 FOP= S2 E8 N7 W8 S5$ N5 E8 S4 E12 S4 E18 N49$.

EXTRA FEATURES

LN	OB/XF CODE	DESCRIPTION	BLD	CAP	L	W	UNITS	UT	Adj R	ADJ UNIT PRICE	ORIG COND	YEAR ON	YEAR ACTUAL	Q	% COND	OB/XF MKT VALUE	NOTES
1	0296	SHED METAL	0	100	6	12	72.00	UT	7.00	7.00	100	2005	2005	3	100	504	
2	0169	FENCE/WOOD	0	100	0	0	276.00	UT	10.00	10.00	100	2005	2005	3	100	2,760	
3	0166	CONC,PAVMT	0	100	14	100	1,400.00	UT	2.50	2.50	100	2005	2005	3	100	3,500	

LAND DESCRIPTION

TOTAL OB/XF 6,764

LN	USE CODE	CLS	LAND USE DESCRIPTION	CAP	RD	LOC ZONE	FRONT	DEPTH	TOT LND UTS	UNIT TYPE	DT	DPTH FACT	% COND	TOT ADJ	UNIT PRICE	ADJ UNIT PRICE	LAND VALUE	OTHER ADJUSTMENTS AND NOTES	YEAR	DENSITY	DECL	FRZ	YR	CONSRV
1	0100	C	SFR	100		*RSF-2	0.00	0.00	1.00	LT		1.00	1.00	1.00	35,000.00	35,000.00	35,000							

REVIEW DATE 06/02/2023 BY JB Total Acres: 0.50 Total Land Value: 35,000 Market: 0 Agricultural: 0 Common: 35,000 PRINTED 08/08/2025 BY SYS