LOT 22 FOREST PLANTATION UNIT 1.
850-1961, WD 1329-1730, WD 1388-

HUNTZBERRY RANDALL L/HUNTZBERRY LINDA S
467 NW FOREST MEADOWS AVE
LAKE CITY, FL 32055

2026

34-3S-16-02461-122

COLUMBIA COUNTY PROPERTY

BUILDING CHARACTERISTICS

ELEMENT	CD	CONSTRUCTION
Exterior Wall	19	COMMON BRK 100
Roof Structur	08	IRREGULAR 100
Roof Cover	03	COMP SHNGL 100
Interior Wall	05	DRYWALL 100
Interior Floo	13	LAM/VNLPLK 60
Interior Floo	15	HARDTILE 40
Air Condition	03	CENTRAL 100
Heating Type	04	AIR DUCTED 100
Bedrooms		3 100
Bathrooms		2 100
Frame	01	NONE 100
Stories	1.	1. 100
Architectual	05	CONV 100
Units		0 100
Condition Adj	03	03 100
Kitchen Adjus	01	01 100
Quality	06	06
DOR CODE	0100	SINGLE FAMILY
MAP NUM		MKT AREA 06
NEIGHBORHOOD/LOC	34316.060	1.00/

AREA TYPE	TOTAL GROSS AREA	PCT OF BASE	YEAR	TOT ADJ AREA	SUBAREA MARKET VALUE
BAS	2,236	100		2,236	279,707
FEP	265	80		212	26,520
FGR	547	55		301	37,653
FOP	54	30		16	2,002
FOP	430	30		129	16,137
TOTALS	3,532			2,894	362,017

MARKET ADJUSTMENTS

TYPE	MDL	EFF. AREA	TOT ADJ PTS	EFF. BASE RATE	REPL. COST NEW	AYB	EYB	ECON	FNCT		NORM	% COND
0100	01	2,894	121.4052	135.97	393,497	1998	2017	0	0	0	8.00	92.00

1 SINGLE FAM 100% - 2020 Heated Area: 2236 HX Base Yr 2022

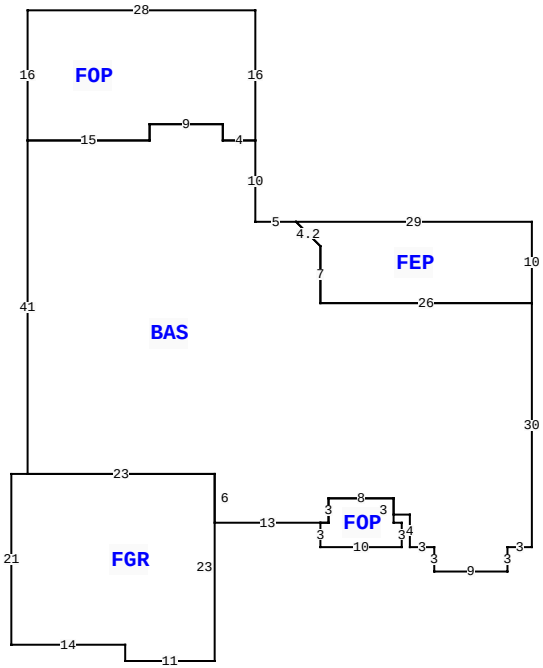

467 NW FOREST MEADOWS AVE, LAKE CITY

BLD DATE		LGL DATE	
XF DATE		LAND DATE	04/03/2025 MLU
INC DATE		AG DATE	

VALUATION SUMMARY

VALUATION BY		STANDARD
Tax Group: 1	Tax Dist:	
BUILDING MARKET VALUE		362,017
TOTAL MARKET OB/XF VALUE		4,487
TOTAL LAND VALUE - MARKET		35,000
TOTAL MARKET VALUE		401,504
SOH/AGL Deduction		94,427
ASSESSED VALUE		307,077
TOTAL EXEMPTION VALUE	HX HB SX	100,722
BASE TAXABLE VALUE		206,355
TOTAL JUST VALUE		401,504
NCON VALUE		0
INCOME VALUE		
PREVIOUS YEAR MKT VALUE		405,439

PERMIT NUM	DESCRIPTION	AMT	ISSUED
130	MAINT/ALTR	160	04/08/2014
1236	ADDN SFR	54	03/19/2009
1143	SFR	575	01/13/1998

SALES DATA

OFF RECORD Number	DATE	TYPE INST	Q U	V I	RSN CD	SALE PRICE
1536/1949	3/28/2025	WD	Q	I	01	460,000
GRANTOR: SERRANO WILFREDO						
GRANTEE: HUNTZBERRY RANDALL						
1439/1255	6/08/2021	WD	Q	I	01	350,000
GRANTOR: WRIGHT KENNON						
GRANTEE: SERRANO WILFREDO						

BUILDING NOTES

BUILDING DIMENSIONS

BAS= W15 S41 FGR= W2 S21 E14S2 E11 N23 W23$ E23 S6 E13 FOP= S3 E10 N3 W1 N3 W8 S3 W1$ E1 N3 E8 S2 E2 S4 E3 S3 E9 N3 E3 N30 FEP= N10 W29 D3 R3 S7 E26$ W26 N7 L3 U3 W5 N10 FOP= N16 W28 S16 E15 N2 E9 S2 E4$ W4 N2 W9 S2$.

EXTRA FEATURES

LN	OB/XF CODE	DESCRIPTION	BLD	CAP	L	W	UNITS	UT	Adj R	ADJ UNIT PRICE	ORIG COND	YEAR ON	YEAR ACTUAL	Q	% COND	OB/XF MKT VALUE	NOTES
1	0166	CONC,PAVMT	0	100	0	0	1,758.00	UT	1.50	1.50	100	1998	1998	3	100	2,637	
2	0169	FENCE/WOOD	0	100	0	0	1.00	UT	0.00	0.00	100	1998	1998	3	100	1,050	
3	0120	CLFENCE 4	0	100	0	0	80.00	UT	7.50	7.50	100	2007	2007	3	100	600	
4	0080	DECKING	0	100	0	0	1.00	UT	0.00	0.00	100	2016	2016	3	100	200	

LAND DESCRIPTION

TOTAL OB/XF 4,487

LN	USE CODE	CLS	LAND USE DESCRIPTION	CAP	RD	LOC ZONE	FRONT	DEPTH	TOT LND UTS	UNIT TYPE	DT	DPTH FACT	% COND	TOT ADJ	UNIT PRICE	ADJ UNIT PRICE	LAND VALUE	OTHER ADJUSTMENTS AND NOTES	YEAR	DENSITY	DECL	FRZ	YR	CONSRV
1	0100	C	SFR	100		RSF-2	0.00	0.00	1.00	LT		1.00	1.00	1.00	35,000.00	35,000.00	35,000							

REVIEW DATE 06/27/2025 BY TP Total Acres: 0.50 Total Land Value: 35,000 Market: 0 Agricultural: 0 Common: 35,000 PRINTED 11/19/2025 BY SYS