COMM SE COR OF SW1/4 OF NW1/4,
RUN N 740 FT FOR POB, CONT N
225 FT, W 140 FT, S 225 FT, E

BYRD YOLANDA
P O BOX 7
FORT WHITE, FL 32038

2026

33-6S-16-04030-000

COLUMBIA COUNTY PROPERTY

BUILDING CHARACTERISTICS

ELEMENT	CD	CONSTRUCTION
Exterior Wall	16	WD FR STUC 100
Roof Structur	03	GABLE/HIP 100
Roof Cover	14	PREFIN MT 100
Interior Wall	02	WALL BD/WD 100
Interior Floo	14	CARPET 90
Interior Floo	06	VINYL ASB 10
Air Condition	03	CENTRAL 100
Heating Type	04	AIR DUCTED 100
Bedrooms		5 100
Bathrooms		3 100
Frame	01	NONE 100
Stories	1.	1. 100
Architectual	05	CONV 100
Units		0 100
Condition Adj	03	03 100
Kitchen Adjus	01	01 100
Quality	05	05
DOR CODE	0100	SINGLE FAMILY
MAP NUM		MKT AREA 02
NEIGHBORHOOD/LOC	16.00	1.00/

AREA TYPE	TOTAL GROSS AREA	PCT OF BASE	YEAR	TOT ADJ AREA	SUBAREA MARKET VALUE
BAS	1,877	100		1,877	133,059
BAS	1,962	100		1,962	139,084
FEP	108	80		86	6,096
FST	70	55		38	2,694
UOP	81	20		16	1,134
UOP	200	20		40	2,835
UOP	276	20		55	3,899
TOTALS	4,574			4,074	288,802

MARKET ADJUSTMENTS

TYPE	MDL	EFF. AREA	TOT ADJ PTS	EFF. BASE RATE	REPL. COST NEW	AYB	EYB	ECON	FNCT		NORM	% COND
0100	01	4,074	97.3750	109.06	444,310	1945	1970	0	0	0	35.00	65.00

1 SINGLE FAM 100% - 0 Heated Area: 3839 HX Base Yr

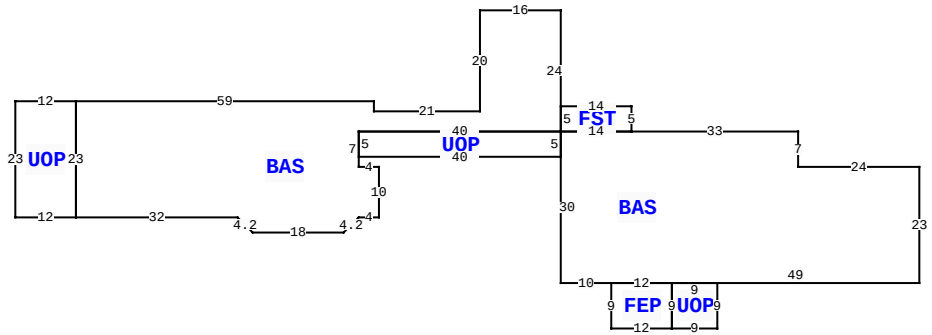

180 SW AMIEL CT, FORT WHITE

BLD DATE		LGL DATE	
XF DATE		LAND DATE	04/07/2025 MLU
INC DATE		AG DATE	

VALUATION SUMMARY

VALUATION BY		STANDARD
Tax Group: 4	Tax Dist:	
BUILDING MARKET VALUE		288,802
TOTAL MARKET OB/XF VALUE		1,200
TOTAL LAND VALUE - MARKET		12,902
TOTAL MARKET VALUE		302,904
SOH/AGL Deduction		192,998
ASSESSED VALUE		109,906
TOTAL EXEMPTION VALUE	HX HB	50,722
BASE TAXABLE VALUE		59,184
TOTAL JUST VALUE		302,904
NCON VALUE		0
INCOME VALUE		
PREVIOUS YEAR MKT VALUE		302,904

PERMIT NUM	DESCRIPTION	AMT	ISSUED

SALES DATA

OFF RECORD Number	DATE	TYPE INST	Q U /	V I /	RSN CD	SALE PRICE
0736/0606	11/15/1990	QC	Q	I	01	0

GRANTOR: CANDAISY BYRD

GRANTEE: YOLANDA BYRD

BUILDING NOTES

BUILDING DIMENSIONS

BAS= W24 N7 W33 FST= N5 W14 S5 E14$ W14 BAS= N24 W16 S20 W21 N2 W59 UOP= W12 S23 E12 N23$ S23 E32 D3 R3 E18 R3 U3 E4 N10 W4 N7 E40$ UOP= W40 S5 E40 N5$ S30 E10 FEP= S9 E12 N9 W12$ E12 UOP= S9 E9 N9 W9$ E49 N23$.

EXTRA FEATURES

LN	OB/XF CODE	DESCRIPTION	BLD	CAP	L	W	UNITS	UT	Adj R	ADJ UNIT PRICE	ORIG COND	YEAR ON	YEAR ACTUAL	Q	% COND	OB/XF MKT VALUE	NOTES
1	0190	FPLC PF	0	100	0	0	1.00	UT	1,200.00	1,200.00	100	1993	1993	3	100	1,200	

LAND DESCRIPTION

TOTAL OB/XF 1,200

LN	USE CODE	CLS	LAND USE DESCRIPTION	CAP	RD	LOC ZONE	FRONT	DEPTH	TOT LND UTS	UNIT TYPE	DT	DPTH FACT	% COND	TOT ADJ	UNIT PRICE	ADJ UNIT PRICE	LAND VALUE	OTHER ADJUSTMENTS AND NOTES	YEAR	DENSITY	DECL	FRZ	YR	CONSRV
1	0100	C	SFR	100		00	0.00	0.00	0.72	AC		1.00	1.00	1.28	14,000.00	17,920.00	12,902							

REVIEW DATE 06/15/2015 BY DF Total Acres: 0.72 Total Land Value: 12,902 Market: 0 Agricultural: 0 Common: 12,902 PRINTED 11/11/2025 BY SYS