(AKA PRCL C, HILLCREST UNR): COM
2304.72 FT FOR POB, RUN N 3 DEG
CONT N 6 DEG E 273.63 FT, S 83 D

SIMPSON MATTHEW S/SIMPSON LORI G
447 SW BREEZY DR
LAKE CITY, FL 32025

2026

33-4S-17-08944-011

COLUMBIA COUNTY PROPERTY

BUILDING CHARACTERISTICS

ELEMENT	CD	CONSTRUCTION
Exterior Wall	19	COMMON BRK 100
Roof Structur	03	GABLE/HIP 100
Roof Cover	03	COMP SHNGL 100
Interior Wall	05	DRYWALL 100
Interior Floo	14	CARPET 90
Interior Floo	12	HARDWOOD 10
Air Condition	03	CENTRAL 100
Heating Type	04	AIR DUCTED 100
Bedrooms		4 100
Bathrooms		3 100
Frame	02	WOOD FRAME 100
Stories	1.	1. 100
Architectual	05	CONV 100
Units		0 100
Condition Adj	03	03 100
Kitchen Adjus	01	01 100
Quality	07	07
DOR CODE	0100	SINGLE FAMILY
MAP NUM		MKT AREA 02
NEIGHBORHOOD/LOC	33417.00	1.00/

AREA TYPE	TOTAL GROSS AREA	PCT OF BASE	YEAR	TOT ADJ AREA	SUBAREA MARKET VALUE
BAS	778	100		778	84,348
BAS	2,649	100		2,649	287,194
FDG	1,196	60		718	77,842
FGR	700	55		385	41,740
FOP	296	30		89	9,649
FOP	609	30		183	19,840
TOTALS	6,228			4,802	520,614

MARKET ADJUSTMENTS

TYPE	MDL	EFF. AREA	TOT ADJ PTS	EFF. BASE RATE	REPL. COST NEW	AYB	EYB	ECON	FNCT		NORM	% COND
0100	01	4,802	120.9978	135.52	650,767	2005	2005	0	0	0	20.00	80.00

1 SINGLE FAM 100% - 2007 Heated Area: 3427 HX Base Yr 2007

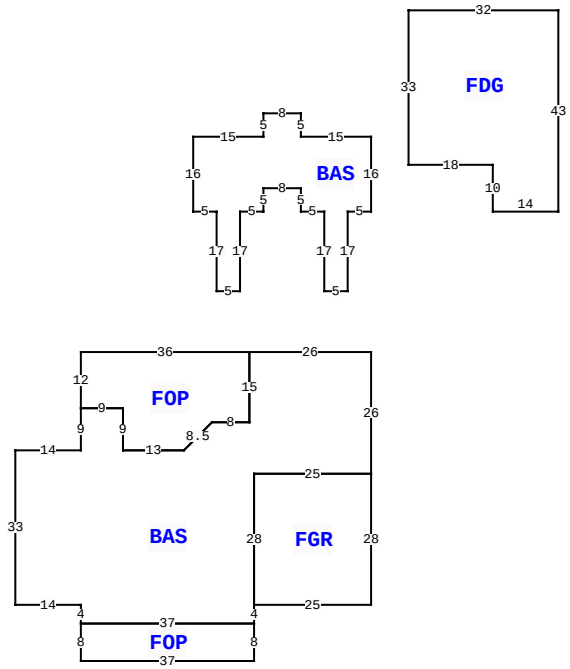

447 SW BREEZY DR, LAKE CITY

BLD DATE		LGL DATE	
XF DATE		LAND DATE	04/08/2025 MLU
INC DATE		AG DATE	

VALUATION SUMMARY

VALUATION BY		STANDARD
Tax Group: 3	Tax Dist:	
BUILDING MARKET VALUE		520,614
TOTAL MARKET OB/XF VALUE		9,005
TOTAL LAND VALUE - MARKET		99,180
TOTAL MARKET VALUE		628,799
SOH/AGL Deduction		217,784
ASSESSED VALUE		411,015
TOTAL EXEMPTION VALUE	HX HB	50,722
BASE TAXABLE VALUE		360,293
TOTAL JUST VALUE		628,799
NCON VALUE		0
INCOME VALUE		
PREVIOUS YEAR MKT VALUE		635,306

PERMIT NUM	DESCRIPTION	AMT	ISSUED
23677	SFR	969	09/30/2005
23678	GARAGE	208	09/30/2005

SALES DATA

OFF RECORD Number	DATE	TYPE INST	Q U /	V I /	RSN CD	SALE PRICE
0942/0220	12/12/2001	WD	Q	V	06	44,900

GRANTOR: PETER W GIEBEIG

GRANTEE: MATTHEW S & LORI GI

BUILDING NOTES

BUILDING DIMENSIONS

BAS= W26 FOP= W36 S12 E9 S9 E13 R6 U6 E8 N15$ S15 W8 D6 L6 W13 N9 W9 S9 W14 S33 E14 S4 FOP= S8 E37 N8 W37$ E37 N4 FGR= E25 N28 W25 S28 $ N28 E25 N26$ PTR= N30 BAS= N16 W15 N5 W8 S5 W15 S16 E5 S17 E5 N17 E5 N5 E8 S5 E5 S17 E5 N17 E5$ S30$ PTR= N30 E40 FDG= N43 W32 S33 E18 S10 E14$ S30 W40$.

EXTRA FEATURES

L N	OB/XF CODE	DESCRIPTION	BLD	CAP	L	W	UNITS	UT	Adj R	ADJ UNIT PRICE	ORIG COND	YEAR ON	YEAR ACTUAL	Q	% COND	OB/XF MKT VALUE	NOTES
1	0166	CONC,PAVMT	0	100	0	0	3,602.00	UT	2.50	2.50	100	2006	2006	3	100	9,005	

LAND DESCRIPTION

TOTAL OB/XF 9,005

L N	USE CODE	CLS	LAND USE DESCRIPTION	CAP	R D	LOC ZONE	FRONT	DEPTH	TOT LND UTS	UNIT TYPE	D T	DPTH FACT	% COND	TOT ADJ	UNIT PRICE	ADJ UNIT PRICE	LAND VALUE	OTHER ADJUSTMENTS AND NOTES	YEAR	DENSITY	DECL	FRZ	YR	CONSRV
1	0100	C	SFR	100		A-1	0.00	0.00	11.02	AC		1.00	1.00	1.00	9,000.00	9,000.00	99,180							

REVIEW DATE 07/11/2017 BY DF Total Acres: 11.02 Total Land Value: 99,180 Market: 0 Agricultural: 0 Common: 99,180 PRINTED 11/18/2025 BY SYS