COMM NW COR OF NE1/4 OF NW1/4, R
233.40 FT FOR POB, RUN S 77 DEG
S 180.68 FT, W 233.30 FT, N 6 DE

INIGUEZ REGINA ELAINE
1189 SW WENDY TER
LAKE CITY, FL 32025

2026

33-4S-17-08940-000

COLUMBIA COUNTY PROPERTY

BUILDING CHARACTERISTICS

ELEMENT	CD	CONSTRUCTION
Exterior Wall	19	COMMON BRK 100
Roof Structur	03	GABLE/HIP 100
Roof Cover	12	MODULAR MT 100
Interior Wall	05	DRYWALL 100
Interior Floo	13	LAM/VNLPLK 70
Interior Floo	15	HARDTILE 30
Air Condition	03	CENTRAL 100
Heating Type	04	AIR DUCTED 100
Bedrooms		2 100
Bathrooms		2 100
Frame	01	NONE 100
Stories	1.	1. 100
Architectual	05	CONV 100
Units		0 100
Condition Adj	03	03 100
Kitchen Adjus	01	01 100
Quality	05	05
DOR CODE	0100	SINGLE FAMILY
MAP NUM		MKT AREA 02
NEIGHBORHOOD/LOC	33417.00	1.00/

AREA TYPE	TOTAL GROSS AREA	PCT OF BASE	YEAR	TOT ADJ AREA	SUBAREA MARKET VALUE
BAS	288	100		288	26,470
BAS	1,300	100		1,300	119,483
FCP	940	25	2022	235	21,599
FEP	288	80	2022	230	21,139
FOP	168	30		50	4,596
FOP	128	30	2022	38	3,492
UST	128	45		58	5,331
UST	260	45	2022	117	10,753
UST	1,456	45	2022	655	60,201
TOTALS	4,956			2,971	273,064

MARKET ADJUSTMENTS

TYPE	MDL	EFF. AREA	TOT ADJ PTS	EFF. BASE RATE	REPL. COST NEW	AYB	EYB	ECON	FNCT		NORM	% COND
0100	01	2,971	117.2300	131.30	390,092	1966	1995	0	0	0	30.00	70.00

1 SINGLE FAM 100% - 2024 Heated Area: 1588 HX Base Yr 2024

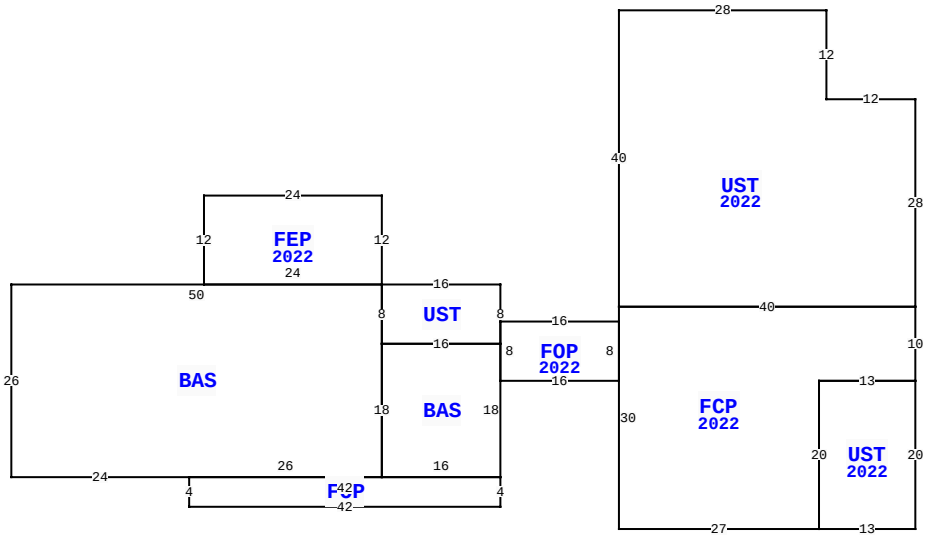

1189 SW WENDY TER, LAKE CITY

BLD DATE		LGL DATE	
XF DATE		LAND DATE	03/22/2022 MLU
INC DATE		AG DATE	

VALUATION SUMMARY

VALUATION BY		STANDARD
Tax Group: 3	Tax Dist:	
BUILDING MARKET VALUE		273,064
TOTAL MARKET OB/XF VALUE		0
TOTAL LAND VALUE - MARKET		20,000
TOTAL MARKET VALUE		293,064
SOH/AGL Deduction		98,192
ASSESSED VALUE		194,872
TOTAL EXEMPTION VALUE	HX HB	50,722
BASE TAXABLE VALUE		144,150
TOTAL JUST VALUE		293,064
NCON VALUE		0
INCOME VALUE		
PREVIOUS YEAR MKT VALUE		296,965

PERMIT NUM	DESCRIPTION	AMT	ISSUED
000048598	Roof Replacement	3,000	11/06/2023
27804	PUMP/UTPOL	50	05/11/2009

SALES DATA

OFF RECORD Number	DATE	TYPE INST	Q U	V I	RSN CD	SALE PRICE
1493/261	6/16/2023	WD	Q	I	01	315,000
GRANTOR: FRITH JERRY ALLEN						
GRANTEE: INIGUEZ REGINA ELAI						
1458/1834	2/02/2022	WD	Q	I	01	295,000
GRANTOR: SIKES SANDRA MAY						
GRANTEE: FRITH JERRY ALLEN						

BUILDING NOTES

BUILDING DIMENSIONS

UST=[YR=2022;ORIG=60,-37] W28 S40 E40 N28 W12 N12 $
BAS=[ORIG=0,0] W50 S26 E24 E26 N18 N8 $
FCP=[YR=2022;ORIG=72,3] W40 S30 E27 N20 E13 N10 $
BAS=[ORIG=0,26] E16 N18 W16 S18 $
UST=[YR=2022;ORIG=59,13] E13 S20 W13 N20 $
FOP=[ORIG=-26,26] S4 E42 N4 W42 $
UST=[ORIG=0,8] E16 N8 W16 S8 $
FOP=[YR=2022;ORIG=16,5] E16 S8 W16 N8 $
FEP=[YR=2022;ORIG=-24,-12] E24 S12 W24 N12 $
.

EXTRA FEATURES

L N	OB/XF CODE	DESCRIPTION	BLD	CAP	L	W	UNITS	UT	Adj R	ADJ UNIT PRICE	ORIG COND	YEAR ON	YEAR ACTUAL	Q	% COND	OB/XF MKT VALUE	NOTES

LAND DESCRIPTION

TOTAL OB/XF 0

L N	USE CODE	CLS	LAND USE DESCRIPTION	CAP	R D	LOC ZONE	FRONT	DEPTH	TOT LND UTS	UNIT TYPE	D T	DPTH FACT	% COND	TOT ADJ	UNIT PRICE	ADJ UNIT PRICE	LAND VALUE	OTHER ADJUSTMENTS AND NOTES	YEAR	DENSITY	DECL	FRZ	YR	CONSRV
1	0100	C	SFR	100		A-1	0.00	0.00	1.00	AC		1.00	1.00	1.00	20,000.00	20,000.00	20,000							

REVIEW DATE 02/06/2024 BY jerry Total Acres: 1.00 Total Land Value: 20,000 Market: 0 Agricultural: 0 Common: 20,000 PRINTED 11/19/2025 BY SYS