LOT 16 CYPRESS LAKE PHASE 3.
ORB 801-028, 831-2175,

SAMERA BIENVENIDO M/SAMERA VIRGINIA
259 SW DRAGONFLY CT
LAKE CITY, FL 32024

2026

33-3S-16-02434-216

BUILDING CHARACTERISTICS

ELEMENT	CD	CONSTRUCTION
Exterior Wall	10	ABOVE AVG. 100
Roof Structur	08	IRREGULAR 100
Roof Cover	03	COMP SHNGL 100
Interior Wall	05	DRYWALL 100
Interior Floo	14	CARPET 90
Interior Floo	15	HARDTILE 10
Air Condition	03	CENTRAL 100
Heating Type	04	AIR DUCTED 100
Bedrooms		3 100
Bathrooms		3 100
Frame	01	NONE 100
Stories	1.	1. 100
Architectual	05	CONV 100
Units		0 100
Condition Adj	03	03 100
Kitchen Adjus	01	01 100
Quality	07	07
DOR CODE	0100	SINGLE FAMILY
MAP NUM		MKT AREA 06
NEIGHBORHOOD/LOC	33316.020	1.00/

AREA TYPE	TOTAL GROSS AREA	PCT OF BASE	YEAR	TOT ADJ AREA	SUBAREA MARKET VALUE
BAS	2,434	100		2,434	232,798
FGR	483	55		266	25,441
FOP	42	30		13	1,243
FSP	200	40		80	7,652
PTO	480	5		24	2,295
UDU	240	55		132	12,625
TOTALS	3,879			2,949	282,055

MARKET ADJUSTMENTS

TYPE	MDL	EFF. AREA	TOT ADJ PTS	EFF. BASE RATE	REPL. COST NEW	AYB	EYB	ECON	FNCT		NORM	% COND
0100	01	2,949	120.2784	134.71	397,260	1996	1996	0	0	0	29.00	71.00

1 SINGLE FAM 100% - 1998 Heated Area: 2434 HX Base Yr 1998

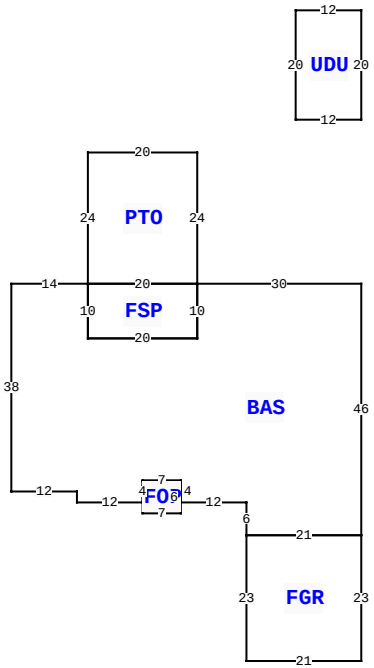

259 SW DRAGONFLY CT, LAKE CITY

BLD DATE		LGL DATE	
XF DATE		LAND DATE	04/03/2025 MLU
INC DATE		AG DATE	

COLUMBIA COUNTY PROPERTY

PAGE 1 of 1 2

VALUATION SUMMARY

VALUATION BY		STANDARD
Tax Group: 2	Tax Dist:	
BUILDING MARKET VALUE		282,055
TOTAL MARKET OB/XF VALUE		8,048
TOTAL LAND VALUE - MARKET		35,000
TOTAL MARKET VALUE		325,103
SOH/AGL Deduction		98,668
ASSESSED VALUE		226,435
TOTAL EXEMPTION VALUE	HX HB	50,722
BASE TAXABLE VALUE		175,713
TOTAL JUST VALUE		325,103
NCON VALUE		0
INCOME VALUE		
PREVIOUS YEAR MKT VALUE		329,075

PERMIT NUM	DESCRIPTION	AMT	ISSUED
32429	MAINT/ALTR	80	10/24/2014
11151	SFR	385	05/15/1996

SALES DATA

OFF RECORD Number	DATE	TYPE INST	Q U	V I	RSN CD	SALE PRICE
0831/2175	12/06/1996	WD	U	I	32	149,900
GRANTOR: VERONICA WILLIAMS						
GRANTEE: BIENVENIDO M & VIRG						
0801/0028	1/25/1995	WD	U	V	35	75,000
GRANTOR: DANIEL CRAPPS & RICHA						
GRANTEE: VERONICA S WILLIAMS						

BUILDING NOTES

BUILDING DIMENSIONS

BAS= W30 PTO= N24 W20 S24 E20$ FSP= W20 S10 E20 N10$ S10 W20 N10 W14 S38 E12 S2 E12 FOP= S2 E7 N6 W7S4$ N4 E7 S4 E12 S6 FGR= S23 E21 N23 W21$ E21 N46$ PTR= N30 UDU= N20 W12 S20 E12$ S30$.

EXTRA FEATURES

LN	OB/XF CODE	DESCRIPTION	BLD	CAP	L	W	UNITS	UT	Adj R	ADJ UNIT PRICE	ORIG COND	YEAR ON	YEAR ACTUAL	Q	% COND	OB/XF MKT VALUE	NOTES
1	0180	FPLC 1STRY	0	100	0	0	1.00	UT	2,000.00	2,000.00	100	1996	1996	3	100	2,000	
2	0166	CONC,PAVMT	0	100	0	0	4,032.00	UT	1.50	1.50	100	1996	1996	3	100	6,048	

LAND DESCRIPTION

TOTAL OB/XF 8,048

LN	USE CODE	CLS	LAND USE DESCRIPTION	CAP	RD	LOC ZONE	FRONT	DEPTH	TOT LND UTS	UNIT TYPE	DT	DPTH FACT	% COND	TOT ADJ	UNIT PRICE	ADJ UNIT PRICE	LAND VALUE	OTHER ADJUSTMENTS AND NOTES	YEAR	DENSITY	DECL	FRZ	YR	CONSRV
1	0100	C	SFR	100		RSF-	1150.00	290.00	1.00	LT		1.00	1.00	1.00	35,000.00	35,000.00	35,000							

REVIEW DATE 06/16/2023 BY JB Total Acres: 1.00 Total Land Value: 35,000 Market: 0 Agricultural: 0 Common: 35,000 PRINTED 11/18/2025 BY SYS