LOT 16 CYPRESS LAKE PHASE 2.
ORB 773-2148, 904-1014 & WD 1238

PATEL DIPAK/PATEL PRATIKSHA
4039 US HWY 90 WEST
LAKE CITY, FL 32055

2026

33-3S-16-02434-116

COLUMBIA COUNTY PROPERTY

BUILDING CHARACTERISTICS

ELEMENT	CD	CONSTRUCTION
Exterior Wall	17	MSNRY STUC 100
Roof Structur	08	IRREGULAR 100
Roof Cover	03	COMP SHNGL 100
Interior Wall	05	DRYWALL 100
Interior Floo	15	HARDTILE 80
Interior Floo	14	CARPET 20
Air Condition	03	CENTRAL 100
Heating Type	04	AIR DUCTED 100
Bedrooms		5 100
Bathrooms		4 100
Frame	03	MASONRY 100
Stories	2.	2. 100
Architectual	05	CONV 100
Units		0 100
Quality	08	08

DOR CODE 0100 SINGLE FAMILY
MAP NUM | MKT AREA 06
NEIGHBORHOOD/LOC 33316.020 1.00/

AREA TYPE	TOTAL GROSS AREA	PCT OF BASE	YEAR	TOT ADJ AREA	SUBAREA MARKET VALUE
BAS	2,778	100		2,778	417,023
FGR	584	55		321	48,188
FOP	32	30		10	1,501
FSP	595	40		238	35,727
FUS	895	100		895	134,354
TOTALS	4,884			4,242	636,794

MARKET ADJUSTMENTS

TYPE	MDL	EFF. AREA	TOT ADJ PTS	EFF. BASE RATE	REPL. COST NEW	AYB	EYB	ECON	FNCT		NORM	% COND
0100	01	4,242	145.6862	163.17	692,167	2017	2017	0	0	0	8.00	92.00

1 SINGLE FAM 0% - 0 Heated Area: 3673 HX Base Yr

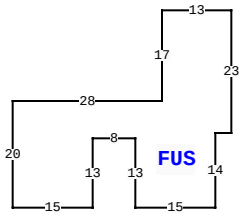

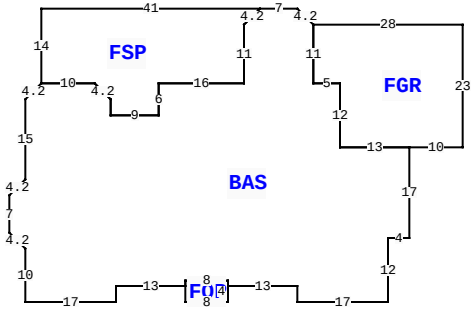

339 SW GREEN ACRES WAY, LAKE CITY

BLD DATE		LGL DATE	
XF DATE		LAND DATE	04/03/2025 MLU
INC DATE		AG DATE	

VALUATION SUMMARY

VALUATION BY	STANDARD
Tax Group: 2	Tax Dist:
BUILDING MARKET VALUE	636,794
TOTAL MARKET OB/XF VALUE	41,478
TOTAL LAND VALUE - MARKET	35,000
TOTAL MARKET VALUE	713,272
SOH/AGL Deduction	0
ASSESSED VALUE	713,272
TOTAL EXEMPTION VALUE	0
BASE TAXABLE VALUE	713,272
TOTAL JUST VALUE	713,272
NCON VALUE	0
INCOME VALUE	
PREVIOUS YEAR MKT VALUE	721,441

PERMIT NUM	DESCRIPTION	AMT	ISSUED
35604	POOL ENCL	144	07/26/2017
35252	POOL	319	05/01/2017
34488	SFR	1,280	09/23/2016

SALES DATA

OFF RECORD Number	DATE	TYPE INST	Q U /	V I /	RSN CD	SALE PRICE
1238/0418	6/27/2012	WD	Q	V	01	42,000
GRANTOR: WULLIAM & MARGARET SE						
GRANTEE: DIPAK & PRATIKSHA P						
0904/1014	6/10/2000	WD	Q	V		28,800
GRANTOR: WILLIAMS'S						
GRANTEE: WULLIAM & MARGARET						

BUILDING NOTES

BUILDING DIMENSIONS

BAS= W7 FSP= W41 S14 E10 D3 R3 S3 E9 N6 E16 N11 R3 U3 $ D3 L3 S11 W16 S6 W9 N3 L3 U3 W10 D3 L3 S15 D3 L3 S7 R3 D3 S10 E17 N3 E13 FOP= S3 E8 N4 W8 S1$ N1 E8 S1 E13 S3 E17 N12 E4 N17 FGR= E10 N23 W28 S11 E5 S12 E13$ W13 N12 W5 N11 L3 U3 $ PTR= N30 FUS= N14 E3 N23 W13 S17 W28 S20 E15 N13 E8 S13 E15$ S30$.

EXTRA FEATURES

LN	OB/XF CODE	DESCRIPTION	BLD	CAP	L	W	UNITS	UT	Adj R	ADJ UNIT PRICE	ORIG COND	YEAR ON	YEAR ACTUAL	Q	% COND	OB/XF MKT VALUE	NOTES
1	0166	CONC,PAVMT	0	0	0	0	2,000.00	UT	2.00	2.00	100	2017	2017	3	100	4,000	
2	0280	POOL R/CON	0	0	0	0	428.00	UT	70.00	70.00	100	2017	2017	3	84	25,166	
3	0282	POOL ENCL	0	0	30	48	1,440.00	UT	15.00	15.00	100	2017	2017	3	57	12,312	

LAND DESCRIPTION

TOTAL OB/XF 41,478

LN	USE CODE	CLS	LAND USE DESCRIPTION	CAP	RD	LOC ZONE	FRONT	DEPTH	TOT LND UTS	UNIT TYPE	DT	DPTH FACT	% COND	TOT ADJ	UNIT PRICE	ADJ UNIT PRICE	LAND VALUE	OTHER ADJUSTMENTS AND NOTES	YEAR	DENSITY	DECL	FRZ	YR	CONSRV
1	0100	C	SFR	0		RSF-	1250.00	180.00	1.00	LT		1.00	1.00	1.00	35,000.00	35,000.00	35,000							

REVIEW DATE 06/20/2023 BY JB Total Acres: 1.03 Total Land Value: 35,000 Market: 0 Agricultural: 0 Common: 35,000 PRINTED 10/03/2025 BY SYS