LOT 8 CYPRESS LAKE PHASE 2.

ORB 738-020

HARKEY B
442 SW RIDGEVIEW PL
LAKE CITY, FL 32024

2026

33-3S-16-02434-108

BUILDING CHARACTERISTICS

ELEMENT	CD	CONSTRUCTION
Exterior Wall	19	COMMON BRK 100
Roof Structur	08	IRREGULAR 100
Roof Cover	03	COMP SHNGL 100
Interior Wall	05	DRYWALL 100
Interior Floo	14	CARPET 90
Interior Floo	11	CLAY TILE 10
Air Condition	03	CENTRAL 100
Heating Type	04	AIR DUCTED 100
Bedrooms		4 100
Bathrooms		3 100
Frame	01	NONE 100
Stories	1.	1. 100
Architectual	05	CONV 100
Units		0 100
Condition Adj	03	03 100
Kitchen Adjus	01	01 100
Quality	07	07
DOR CODE	0100	SINGLE FAMILY
MAP NUM		MKT AREA 06
NEIGHBORHOOD/LOC	33316.020	1.00/

AREA TYPE	TOTAL GROSS AREA	PCT OF BASE	YEAR	TOT ADJ AREA	SUBAREA MARKET VALUE
BAS	3,203	100		3,203	293,548
FEP	119	80		95	8,707
FGR	638	55		351	32,168
FOP	24	30		7	642
FOP	24	30		7	642
PTO	240	5		12	1,100
TOTALS	4,248			3,675	336,805

MARKET ADJUSTMENTS

TYPE	MDL	EFF. AREA	TOT ADJ PTS	EFF. BASE RATE	REPL. COST NEW	AYB	EYB	ECON	FNCT		NORM	% COND
0100	01	3,675	123.9854	138.86	510,310	1991	1991	0	0	0	34.00	66.00

1 SINGLE FAM 100% - 2019 Heated Area: 3203 HX Base Yr 2019

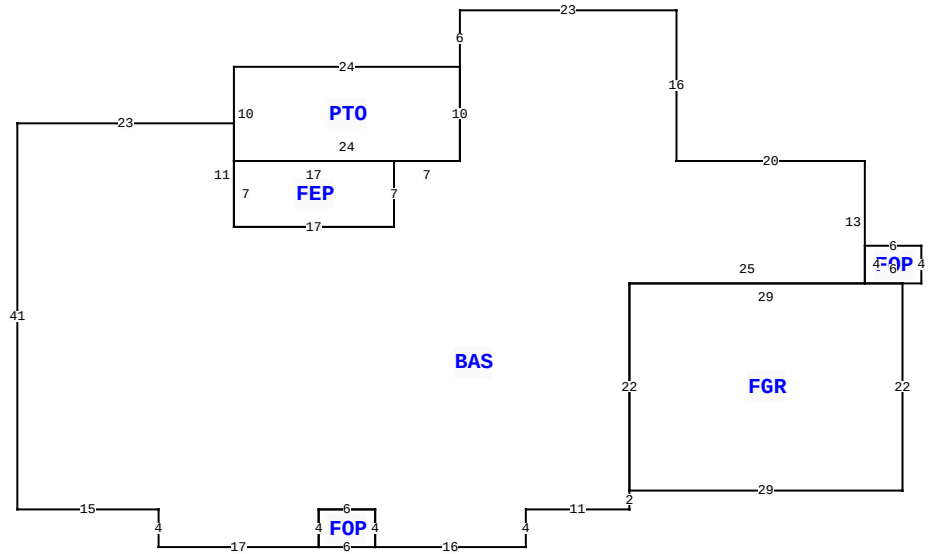

442 SW RIDGEVIEW PL, LAKE CITY

BLD DATE		LGL DATE	
XF DATE		LAND DATE	04/03/2025 MLU
INC DATE		AG DATE	

COLUMBIA COUNTY PROPERTY

PAGE 1 of 1 2

VALUATION SUMMARY

VALUATION BY		STANDARD
Tax Group: 2	Tax Dist:	
BUILDING MARKET VALUE		336,805
TOTAL MARKET OB/XF VALUE		7,420
TOTAL LAND VALUE - MARKET		35,000
TOTAL MARKET VALUE		379,225
SOH/AGL Deduction		98,729
ASSESSED VALUE		280,496
TOTAL EXEMPTION VALUE	HX HB	50,722
BASE TAXABLE VALUE		229,774
TOTAL JUST VALUE		379,225
NCON VALUE		0
INCOME VALUE		
PREVIOUS YEAR MKT VALUE		384,328

PERMIT NUM	DESCRIPTION	AMT	ISSUED
31407	MAINT/ALTR	115	08/29/2013

SALES DATA

OFF RECORD Number	DATE	TYPE INST	Q U	V I	RSN CD	SALE PRICE
0738/0020	11/16/1990	WD	Q	V		16,500

GRANTOR: COLE-CRAPPS

GRANTEE: B HARKEY

BUILDING NOTES

BUILDING DIMENSIONS

BAS= W20 N16 W23 S6 PTO= W24 S10 E24 N10$ S10 W7 FEP= W17 S7 E17 N7$ S7 W17 N11 W23 S41 E15 S4 E17 FOP= E6 N4 W6S4$ N4 E6 S4 E16 N4 E11 N2 FGR= E29 N22 W29 S22$ N22 E25 FOP= E6 N4 W6 S4$ N13$.

EXTRA FEATURES

LN	OB/XF CODE	DESCRIPTION	BLD	CAP	L	W	UNITS	UT	Adj R	ADJ UNIT PRICE	ORIG COND	YEAR ON	YEAR ACTUAL	Q	% COND	OB/XF MKT VALUE	NOTES
1	0180	FPLC 1STRY	0	100	0	0	1.00	UT	2,000.00	2,000.00	100	0	0	3	100	2,000	
2	0166	CONC,PAVMT	0	100	0	0	1.00	UT	0.00	0.00	100	0	0	3	100	5,420	

LAND DESCRIPTION

TOTAL OB/XF 7,420

LN	USE CODE	CLS	LAND USE DESCRIPTION	CAP	RD	LOC ZONE	FRONT	DEPTH	TOT LND UTS	UNIT TYPE	DT	DPTH FACT	% COND	TOT ADJ	UNIT PRICE	ADJ UNIT PRICE	LAND VALUE	OTHER ADJUSTMENTS AND NOTES	YEAR	DENSITY	DECL	FRZ	YR	CONSRV
1	0100	C	SFR	100		RSF-	1185.00	226.00	1.00	LT		1.00	1.00	1.00	35,000.00	35,000.00	35,000							

REVIEW DATE 06/20/2023 BY JB Total Acres: 0.96 Total Land Value: 35,000 Market: 0 Agricultural: 0 Common: 35,000 PRINTED 11/19/2025 BY SYS